SmartLine

Honeywell

Technical Information

STR800 SmartLine Remote Diaphragm Seals Specification 34-ST-03-88, November 2018

Introduction

Part of the SmartLine® family of products, the STR800 is a series of high performance pressure transmitters hydraulically matched and optimized with a complete set of remote diaphragm seals. Utilizing the same high performance sensor technology of the ST 800 product line Honeywell has optimized the mechanical and hydraulic designs in order to minimize the typical effects of temperature on remote seal systems.

Best in Class Transmitter Features:

- Accuracies up to 0.065% Span standard
- Automatic static pressure & temperature compensation
- Multiple local display capabilities
- External zero, span, & configuration capability
- Polarity insensitive electrical connections
- Comprehensive on-board diagnostic capabilities
- Integral Dual Seal design for highest safety based on ANSI/NFPA 70-202 and ANSI/ISA 12.27.0
- World class overpressure protection
- Full compliance to SIL 2/3 requirements.
- Modular design characteristics
- Available with 15 year warranty

Remote Seal/Transmitter Span & Range Limits:

Model	URL "H_2O (mbar)	LRL "H_2O (mbar)	Max Span "H_2O (mbar)	Min Span "H_2O (mbar)
STR82D	400 (1000)	-400 (-1000)	400 (1000)	4.0 (10)
Model	**psid (bar)**	**psid (bar)**	**psid (bar)**	**psid (bar)**
STR83D	100 (7.0)	-100 (-7.0)	100 (7.0)	1 (0.07)
Model	**psig (bar)**	**psig (bar)**	**psig (bar)**	**psig (bar)**
STR84G	500 (35.0)	-14.7 (-1.0)	500 (35.0)	5 (0.35)
STR87G	3000 (210)	-14.7 (-1.0)	3000 (210)	30 (2.1)
Model	**psia (bara)**	**psig (bara)**	**psig (bara)**	**psig (bara)**
STR84A	500 (35)	0 (0)	500 (35)	5 (0.35)

Figure 1 – STR800 Remote Diaphragm Seal Unit

Typical Diaphragm Seal applications

- High Process Temperatures
- Viscous or Suspended Solids
- Highly Corrosive Process Materials
- Sanitary Applications
- Applications with Hydrogen Permeation Possibilities
- Level Applications with Maintenance Intensive Wet Legs
- Applications requiring remote Transmitter Mounting
- Tank Applications with Density or Interface Measurements

Communications/Output Options:

- Honeywell Digitally Enhanced (DE)
- HART ® (version 7.0)
- FOUNDATION™ Fieldbus

All transmitters are available with the above listed communications protocols.

Description

The SmartLine family of gauge pressure, differential pressure, and absolute pressure transmitters is designed around a high performance piezo-resistive sensor. This one sensor actually integrates multiple sensors linking process pressure measurement with on-board static pressure (DP Models) and temperature compensation measurements resulting in the best total performance available. This level of performance allows the ST 800 to replace virtually any competitive transmitter available today.

Unique Indication/Display Options

The ST 800 modular design accommodates a basic alphanumeric LCD display or a unique advanced graphics LCD display with many unparalleled features.

Basic Alphanumeric LCD Display Features

- Modular (may be added or removed in the field)
- 0, 90,180, & 270 degree position adjustments
- Configurable (HART only) and standard (Pa, KPa, MPa, KGcm2, Torr, ATM, inH_2O, mH_2O, bar, mbar, inH_2O, inHG, FTH_2O, mmH_2O, mm HG, & psi) measurement units
- 2 Lines 16 Characters (4.13H x 1.83W mm)
- Square root output indication **(√)**

Advanced Graphics LCD Display Features

- Modular (may be added or removed in the field)
- 0, 90, 180, & 270 degree position adjustments
- Standard and custom measurement units available.
- Up to eight display screens with 3 formats are possible (Large PV with Bar Graph or PV with Trend Graph)
- Configurable screen rotation timing
- Display Square Root capabilities may be set separately from the 4-20mA dc output signal
- Unique “Health Watch” indication provides instant visibility of diagnostics
- Multiple language capability. (EN, DE, FR, IT, ES, RU, TR, CN, JP)

Diagnostics

SmartLine transmitters all offer digitally accessible diagnostics which aid in providing advanced warning of possible failure events minimizing unplanned shutdowns, providing **lower overall operational costs**

Configuration Tools

Integral Three Button Configuration Option

Suitable for all electrical and environmental requirements, SmartLine offer the ability to configure the transmitter and display via three externally accessible buttons when either display option is selected. Zero/span capabilities are also optionally available via these buttons with or without selection of a display option.

Hand Held Configuration

SmartLine transmitters feature two-way communication and configuration capability between the operator and the transmitter. This is accomplished via Honeywell’s field-rated Multiple Communication Configurator (MCT202).
The MCT202 is capable of field configuring DE and HART Devices and can also be ordered for use in intrinsically safe environments. All Honeywell transmitters are designed and tested for compliance with the offered communication protocols and are designed to operate with any properly validated hand held configuration device.

Personal Computer Configuration

Honeywell’s SCT 3000 Configuration Toolkit provides an easy way to configure Digitally Enhanced (DE) instruments using a personal computer as the configuration interface. Field Device Manager (FDM) Software and FDM Express are also available for managing HART & Fieldbus device configurations.

System Integration

- SmartLine communications protocols all meet the most current published standards for HART/DE/Fieldbus.
- Integration with Honeywell’s Experion PKS offers the following unique advantages.
  - Transmitter messaging
  - Maintenance mode indication
  - Tamper reporting
  - FDM Plant Area Views with Health summaries
  - All ST 800 units are Experion tested to provide the highest level of compatibility assurance

Modular Design

To help contain maintenance & inventory costs, all STR800 transmitters are modular in design supporting the user’s ability to replace or add indicators, terminal connections or electronic modules without affecting overall performance or approval body certifications

Modular Features

- Exchange/replace electronics/comms modules*
- Add or remove integral indicators*
- Add or remove lightning protection (terminal connection)*

* Field replaceable in all electrical environments (including IS) except flameproof without violating agency approvals.

With no performance effects, Honeywell’s unique modularity results in ***lower inventory needs and lower overall operating costs.***

Performance Specifications

Reference Accuracy (conformance to +/-3 Sigma)

Model	URL	LRL	Min Span	Maximum Turndown Ratio	Reference Accuracy[1,2] (% Span)
STR82D	400 in H_2O/1000mbar	-400 in H_2O/-1000mbar	4 in H_2O/10mbar	100:1	0.065
STR83D	100 psid/7.0 bar	-100 psi/-7.0bar	1 in psi/.07bar	100:1	0.065
STR84G	500 psi/35 bar	-14.7/-1.0 bar	5 psi/0.35 bar	100:1	0.065
STR87G	3000 psi/210 bar	-14.7 psi/-1.0 bar	30 psi/2.1 bar	100:1	0.065
STR84A	500 psia/35 bara	0 psia/0 bara	5 psia/0.35 bara	100:1	0.065

Zero and span may be set anywhere within the listed (URL/LRL) range limits

Accuracy at Specified Span, Temperature and Static Pressure: (conformance to +/-3 Sigma)

		Accuracy[1,2] (% of Span)				Temperature Effect[3] (%Span/50°F)		
Model	URL	Turn down greater than	A	B	C (see URL Units)	D	E	F
STR82D	400 in H_2O (1000mbar)	8:1	0.015	0.050	50 (125)	0.175	1.000	200 (500)
STR83D	100 psi (7.0 bar)	3.33:1	0.015	0.050	30 (2.1)	0.025	0.280	30 (2.1)
STR84G	500 psig (35 bar)	25:1	0.015	0.050	20 (1.4)			
STR87G	3000 psi (210 bar)	10:1	0.015	0.050	300 (21)			
STR84A	500 psia (35 bara)	25:1	0.015	0.050	20 (1.4)			
		Turn Down Effect $\pm\left[A + B\left(\frac{C}{Span}\right)\right]$ % Span				Temp Effect $\pm\left[D + E\left(\frac{F}{Span}\right)\right]$ % Span per 28°C (50°F)		

Total Performance (% of Span):

$$\text{Total Performance} = +/- \sqrt{(\text{Accuracy})^2 + (\text{Temp Effect})^2}$$

Total Performance Examples: (5:1 Turndown, up to 50 °F shift)

STR82D @ 80"H_2O: 2.68% of span **STR83D @ 20 psid:** 0.45% of span

Typical Calibration Frequency:

Calibration verification is recommended every four (4) years

Notes:

1.Terminal Based Accuracy – Includes combined effects of linearity, hysteresis, and repeatability. Analog output adds 0.005% of span.

2. For zero based spans and reference conditions of 25°C (77°F). 0 psi static pressure for DP, >= 0 psia for GP, 10 to 55% R.H, and 316 Stainless Steel barrier diaphragms

3. Specification applies to transmitter with 2 balanced remote seals. Apply a 1.5 factor for temperature effect for capillary lengths greater than 10 feet.

Operating Conditions – All Models

Parameter	Reference Condition (at zero static)		Rated Condition		Operative Limits		Transportation and Storage	
	°C	°F	°C	°F	°C	°F	°C	°F
Ambient Temperature[1]	25±1	77±2	-	-	-	-	-55 to 90	-67 to 194
Humidity %RH	10 to 55		0 to 100		0 to 100		0 to 100	
Vacuum Region, Minimum Pressure mmHg absolute	Atmospheric (See Figure 4 for vacuum limitation)							
Supply Voltage, Current, and Load Resistance	10.8 to 42.4 Vdc at terminals (IS versions limited to 30 Vdc) 0 to 1,440 ohms (as shown in Figure 2)							
Maximum Allowable Working Pressure (MAWP)[4] (ST 800 products are rated to Maximum Allowable Working Pressure. MAWP depends on Approval Agency and transmitter materials of construction.)	MAWP is minimum of Body Rating or Seal Rating (See Model Selection Guide for Seal **Body** **MAWP** STR82D 2,500 psig (172 bar) Bolted Process Heads STR83D 2,500 psig (172 bar) Bolted Process Heads STR82D 1,450 psig (100 bar) All Welded Process STR83D 1,450 psig (100 bar) All Welded Process STR84G 500 psig (35 bar) STR87G 3,000 psig (207 bar) STR84A 500 psia (35 bara)							

[1] Ambient Temperature Limit is a function of Process Interface Temperature and fill fluid. (See Figure 3 & Figure 4)

LCD Display operating temperature -20°C to +70°C . Storage temperature -30°C to 80°C

[4] Consult factory for MAWP of ST 800 transmitters with CRN approval.

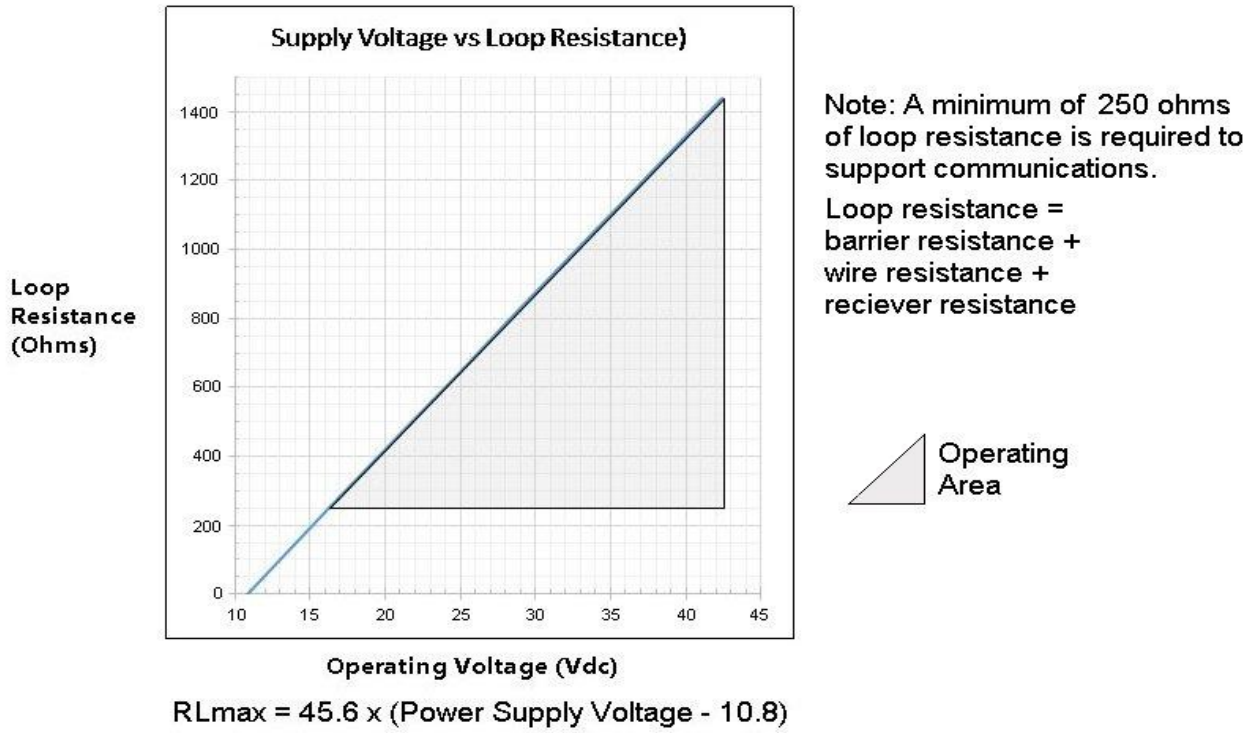

Figure 2 - Supply voltage and loop resistance

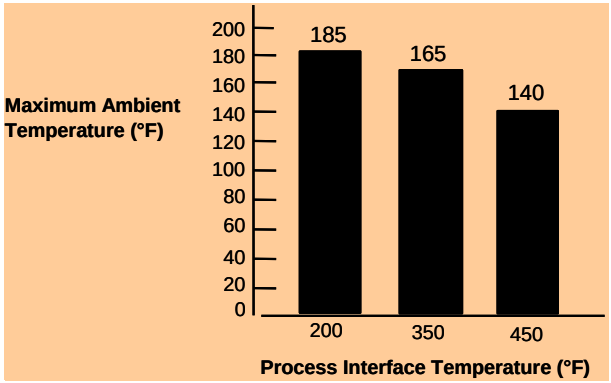

Figure 3 - Ambient temperature limits

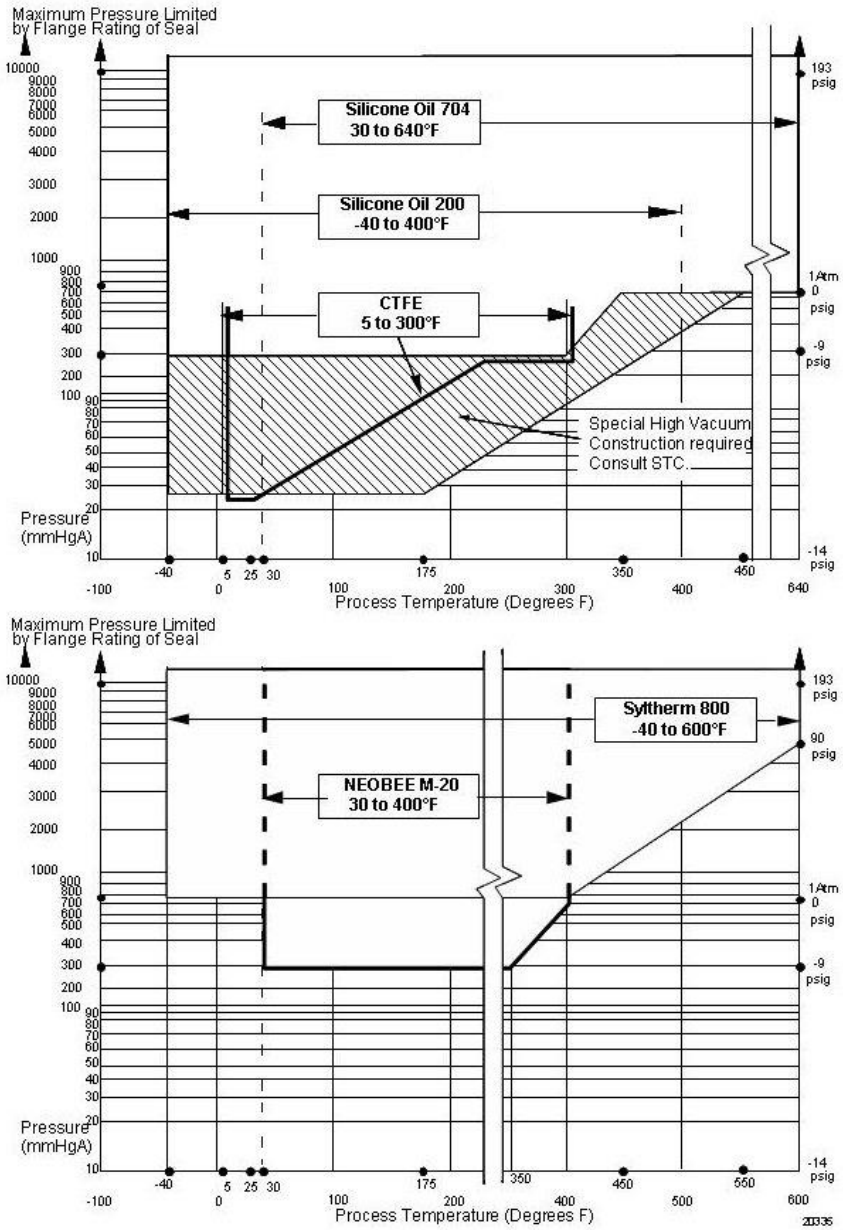

Figure 4 - STR800 Remote Seals operable limits for pressure vs. temperature

Performance Under Rated Conditions – All Models

Parameter	Description
Analog Output **Digital Communications**:	Two-wire, 4 to 20 mA (HART & DE Transmitters only) Honeywell DE, HART 7 protocol or FOUNDATION Fieldbus ITK 6.0.1 compliant All transmitters, irrespective of protocol have polarity insensitive connection.
HART & DE Output Failure Modes (NAMUR for DE Units requires selecting display and configuration buttons or factory configuration)	**Honeywell Standard:** / **NAMUR NE 43** **Compliance**: **Normal Limits:** 3.8 – 20.8 mA / 3.8 – 20.5 mA **Failure Mode:** ≤ 3.6 mA and ≥ 21.0 mA / ≤ 3.6 mA and ≥ 21.0 mA
Supply Voltage Effect	0.005% span per volt.
Transmitter Turn on Time (includes power up & test algorithms)	HART or DE: 2.5 sec. Foundation Fieldbus: Host dependant
Damping Time Constant	**HART:** Adjustable from 0 to 32 seconds in 0.1 increments. **Default:** 0.50 seconds **DE:** Discrete values 0, .16, .32, .48, 1, 2, 4, 8, 16, 32 seconds. **Default:** 0.48 seconds
Electromagnetic Compatibility	IEC 61326-3-1
Lightning Protection Option	**Leakage Current:** 10uA max @ 42.4VDC 93C **Impulse rating:** 8/20uS 5000A (>10 strikes) 10000A (1 strike min.) 10/1000uS 200A (> 300 strikes)

Materials Specifications (see Model Selection Guide for availability/restrictions with various models)

Parameter	Description
Process Interface	See Model Selection Guide for Material Options for desired seal type.
Seal Barrier Diaphragm	316L Stainless Steel, Monel®, Hastelloy® C, Tantalum
Seal Gasket Materials	Klinger C-4401 (non-asbestos), Grafoil®, Teflon®, Gylon 3510®
Mounting Bracket	Carbon Steel (Zinc-Chromate plated) or 304 Stainless Steel or 316 Stainless Steel
Fill Fluid (Meter Body)	Silicone 200 S.G. @ 25°C = 0.94 CTFE (Chlorotrifluoroethylene) S.G. @ 25°C = 1.89 Silicone 704 S.G. @ 25°C = 1.07 NEOBEE M-20® S.G. @ 25°C = 0.93
Fill Fluid (Secondary)	Silicone Oil 200 S.G. @ 25°C = 0.94 CTFE (Chlorotrifluoroethylene) S.G. @ 25°C = 1.89 Silicone Oil 704 S.G. @ 25°C = 1.07 Syltherm 800® S.G. @ 25°C = 0.90 NEOBEE M-20® S.G. @ 25°C = 0.93
Electronic Housing	Pure Polyester Powder Coated Low Copper (<0.4%)-Aluminum. Meets NEMA 4X, IP66, & P67. All stainless steel housing is optional.
Capillary Tubing	**Material:** Armored Stainless Steel or PVC Coated Armored Stainless Steel. **Length:** 5, 10, 15, 20, 25, and 35 feet (1.5, 3, 4.6, 6.1, 7.5, and 10.7 meters). A 2 inch (51 millimeter) S.S. close-coupled nipple is also available. See Model Selection Guide. Refer to Note: The minimum span is the higher of the higher of the value from the table above or the value defined under the Performance Conditions for the range transmitter. Figure 5 for guide to maximum capillary length vs. diaphragm diameter.
Wiring	Accepts up to 16 AWG (1.5 mm diameter)
Mounting	See Figure 6
Dimensions	**Transmitter:** See Figure 7 and Figure 8. **Seal:** See Figure 9 through Figure 17
Net Weight	**Transmitter:** 8.3 pounds (3.8 Kg). With Aluminum Housing. Total weight is dependent on seal

NOTE: Pressure transmitters that are part of safety equipment for the protection of piping (systems) or vessel(s) from exceeding allowable pressure limits, (equipment with safety functions in accordance with Pressure Equipment Directive 97/23/EC article 1, 2.1.3), require separate examination.

Minimum recommended span for STR82D and STR83D Transmitter with two Remote Seals

Diaphragm Size (Inches)	Capillary Length (Feet)						Maximum Capillary Length (Feet)
	5	10	15	20	25	35	
2.4	7.2 psi						5
2.9	3.6 psi	4.5 psi	5.4 psi	6.3 psi			20
3.5	0.6 psi	0.7 psi	0.9 psi	1.0 psi	1.2 psi	1.4 psi	35
4.1	0.4 psi	0.5 psi	0.6 psi	0.8 psi	0.9 psi	1.1 psi	35

Minimum recommended span for STR82D and STR83D Transmitter with one Remote Seal

Diaphragm Size (Inches)	Direct Mount	Capillary Length (Feet)						Maximum Capillary Length (Feet)
		5	10	15	20	25	35	
2.4	20 psi	30 psi						5
2.9	10 psi	15 psi	20 psi	25 psi	30 psi			20
3.5	1.8 psi	2.9 psi	3.6 psi	4.3 psi	5.0 psi	5.8 psi	7.2 psi	35
4.1	1.4 psi	2.2 psi	2.9 psi	3.6 psi	4.3 psi	5.0 psi	5.8 psi	35

Minimum recommended span for STR84G, STR84A and STR87G Transmitter

Diaphragm Size (Inches)	Direct Mount	Capillary Length (Feet)						Maximum Capillary Length (Feet)
		5	10	15	20	25	35	
1.9	25 psi	30 psi	40 psi	50 psi				15
2.4	10 psi	15 psi	20 psi	25 psi	30 psi	35 psi	50 psi	35
2.9	8 psi	9 psi	10 psi	11 psi	12 psi	13 psi	15 psi	35
3.5	5 psi	5 psi	5 psi	5 psi	5 psi	6 psi	8 psi	35
4.1	5 psi	5 psi	5 psi	5 psi	5 psi	6 psi	8 psi	35

Note: The minimum span is the higher of the higher of the value from the table above or the value defined under the Performance Conditions for the range transmitter.

Figure 5 – Typical Maximum capillary length and diaphragm size chart

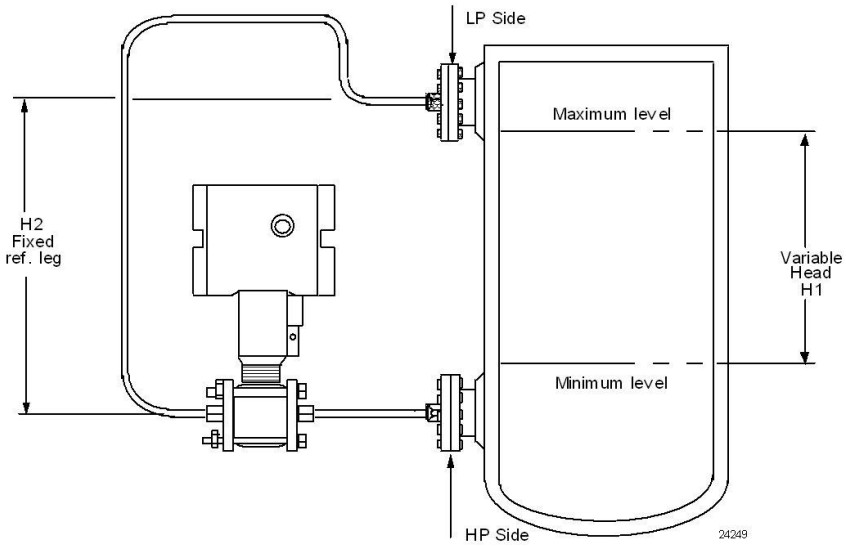

NOTE: Lower flange seal should not be mounted over 22 feet below or above the transmitter for silicone fill fluid (11 feet for CTFE fill fluid) with tank at one atmosphere. The combination of tank vacuum and high pressure capillary head effect should not exceed 9 psi vacuum (300 mmHg absolute).

Figure 6 - STR800 transmitter with remote diaphragm seals shown mounted on a tank

Reference Dimensions Horizontal Mounting

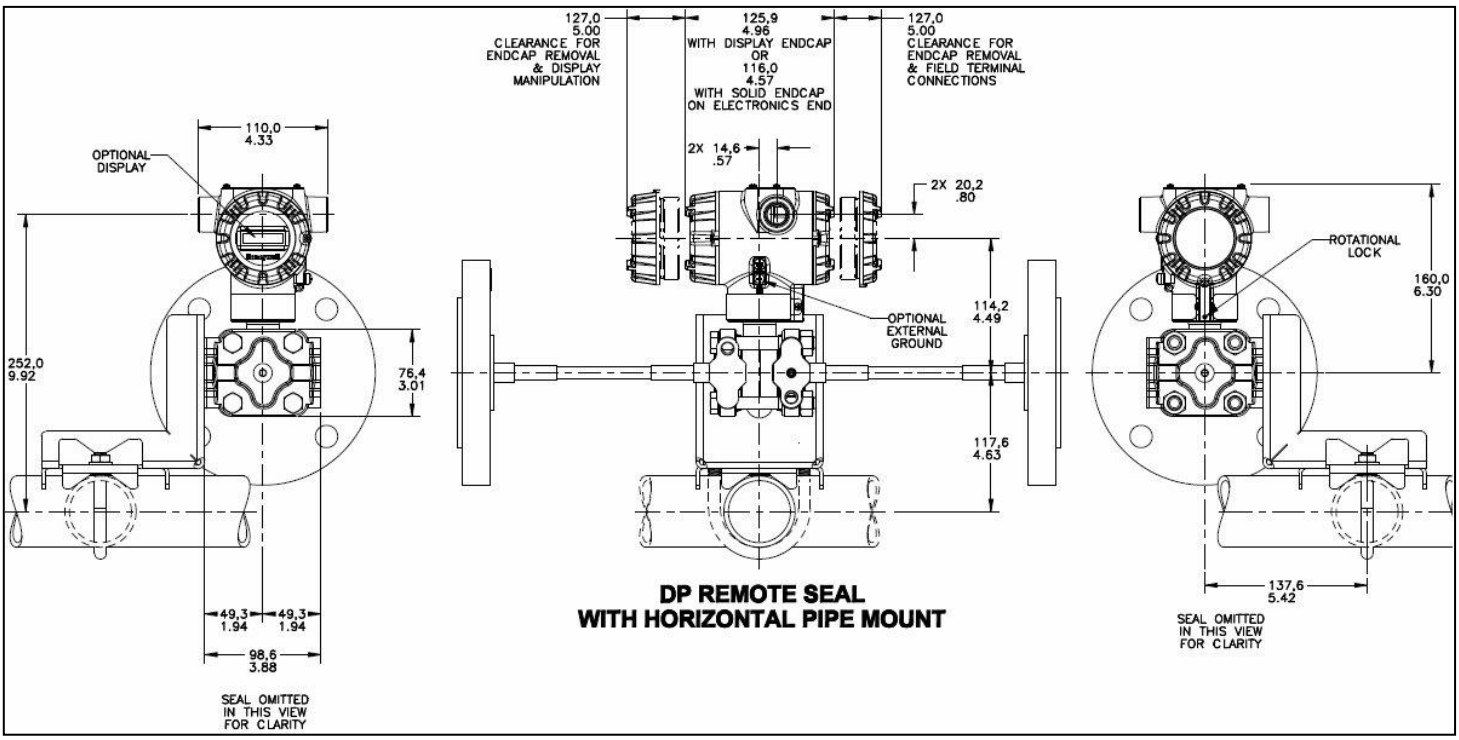

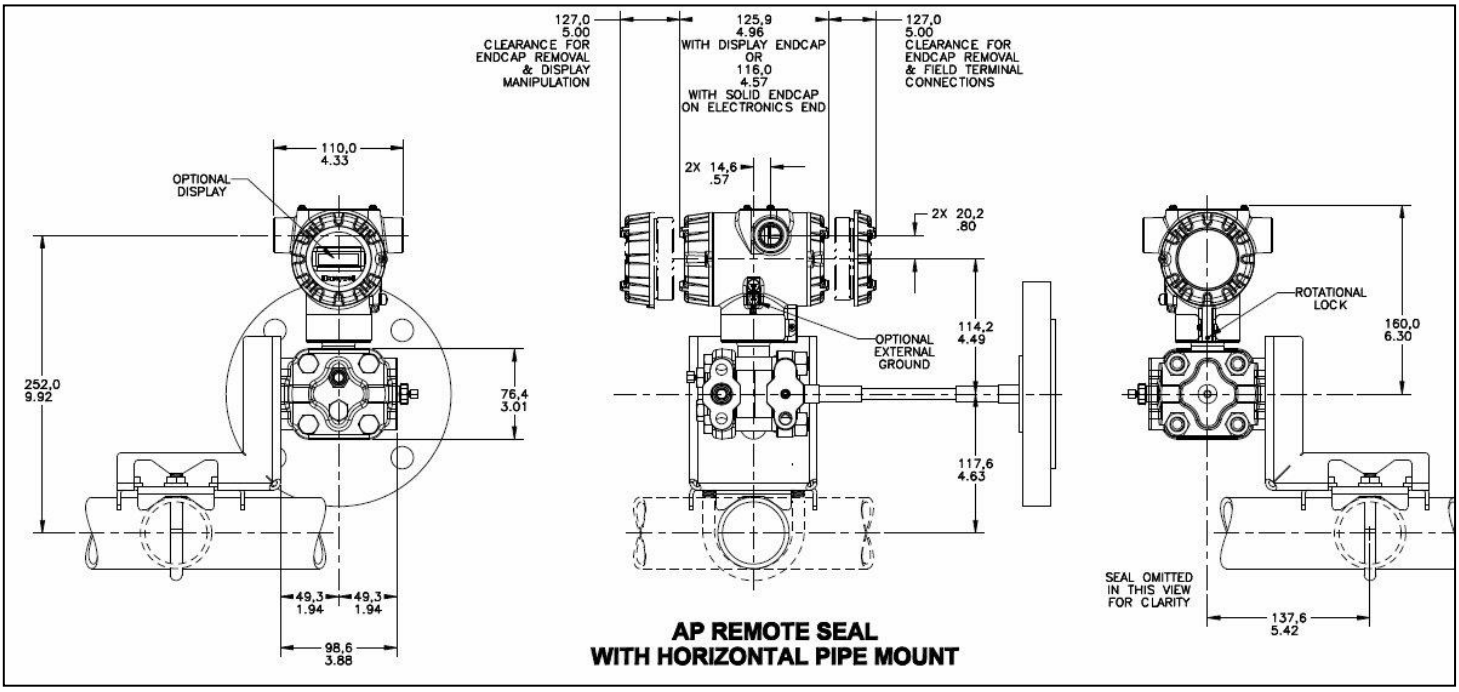

Reference Dimensions Horizontal Mounting (cont'd)

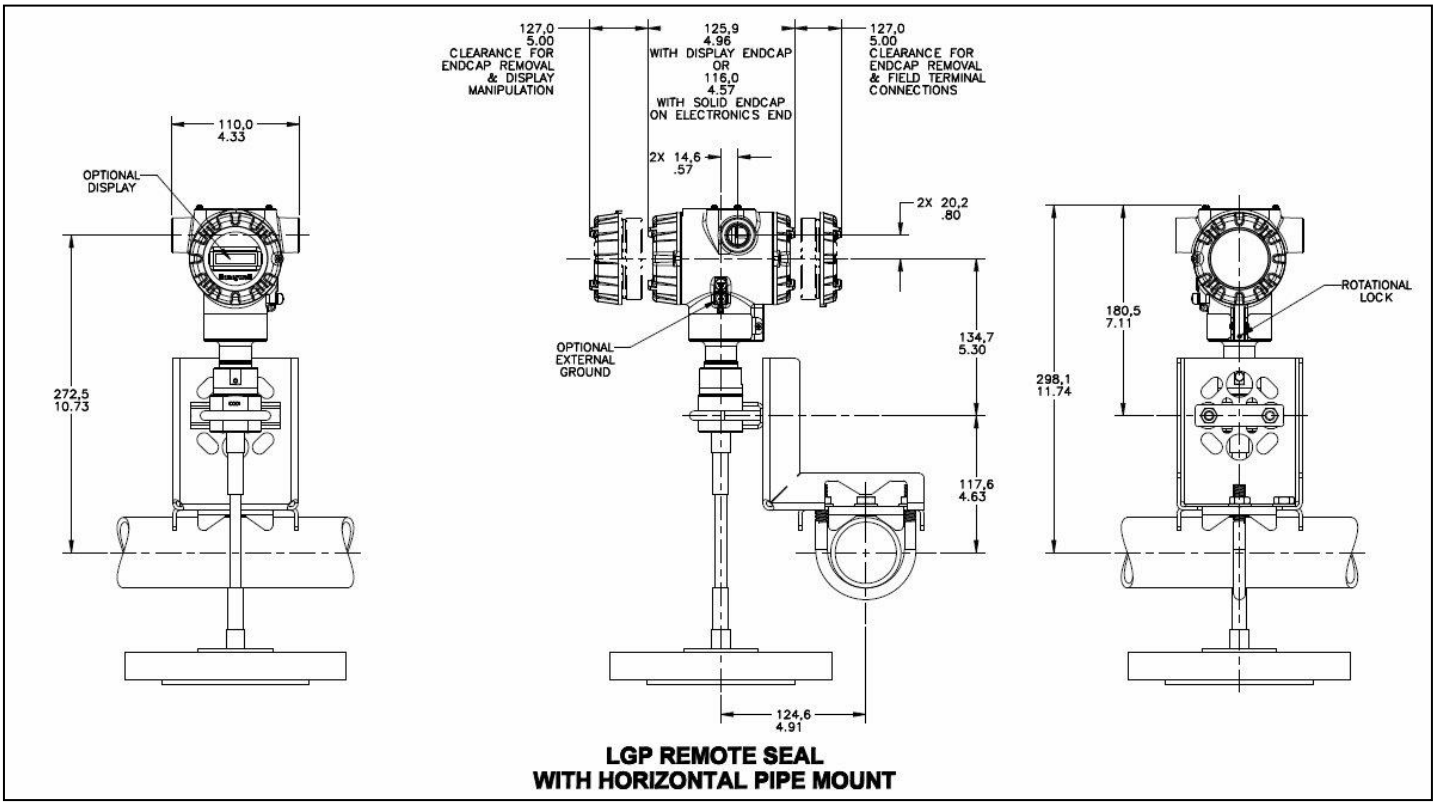

Figure 7 — Approximate horizontal mounting dimensions for Remote Seal Transmitter

Reference Dimensions Vertical Mounting

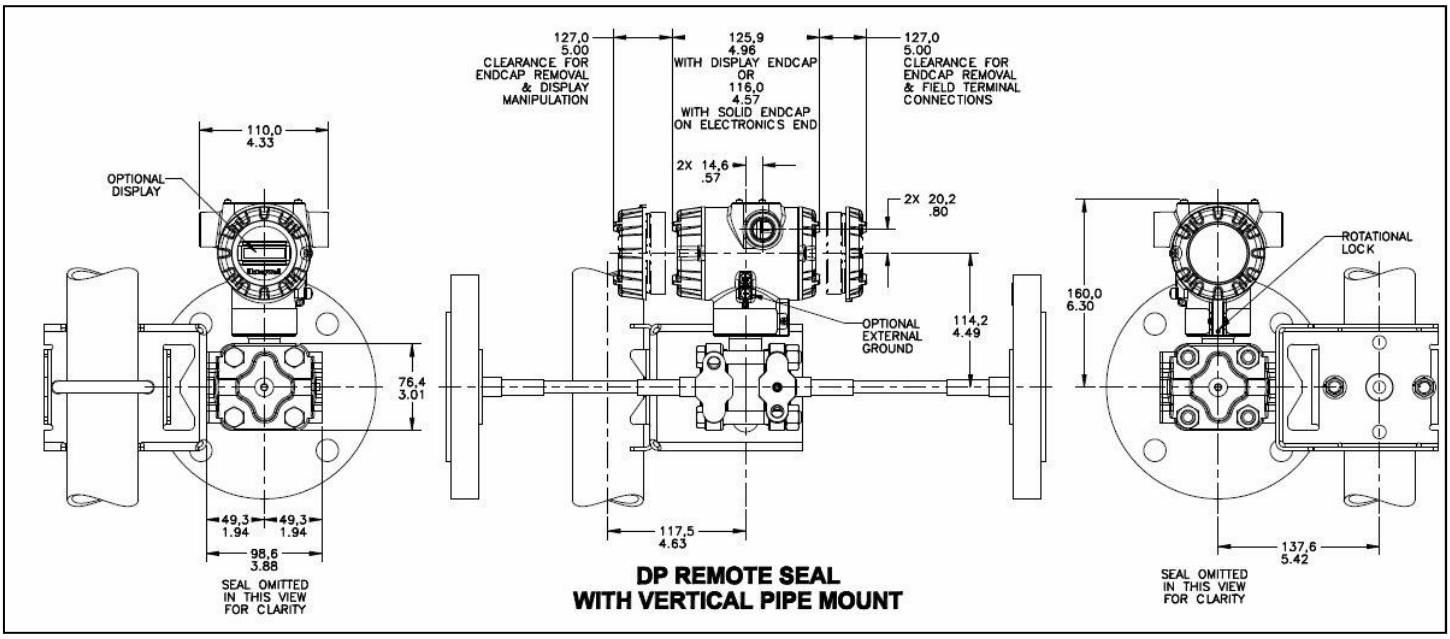

Reference Dimensions Vertical Mounting (cont'd)

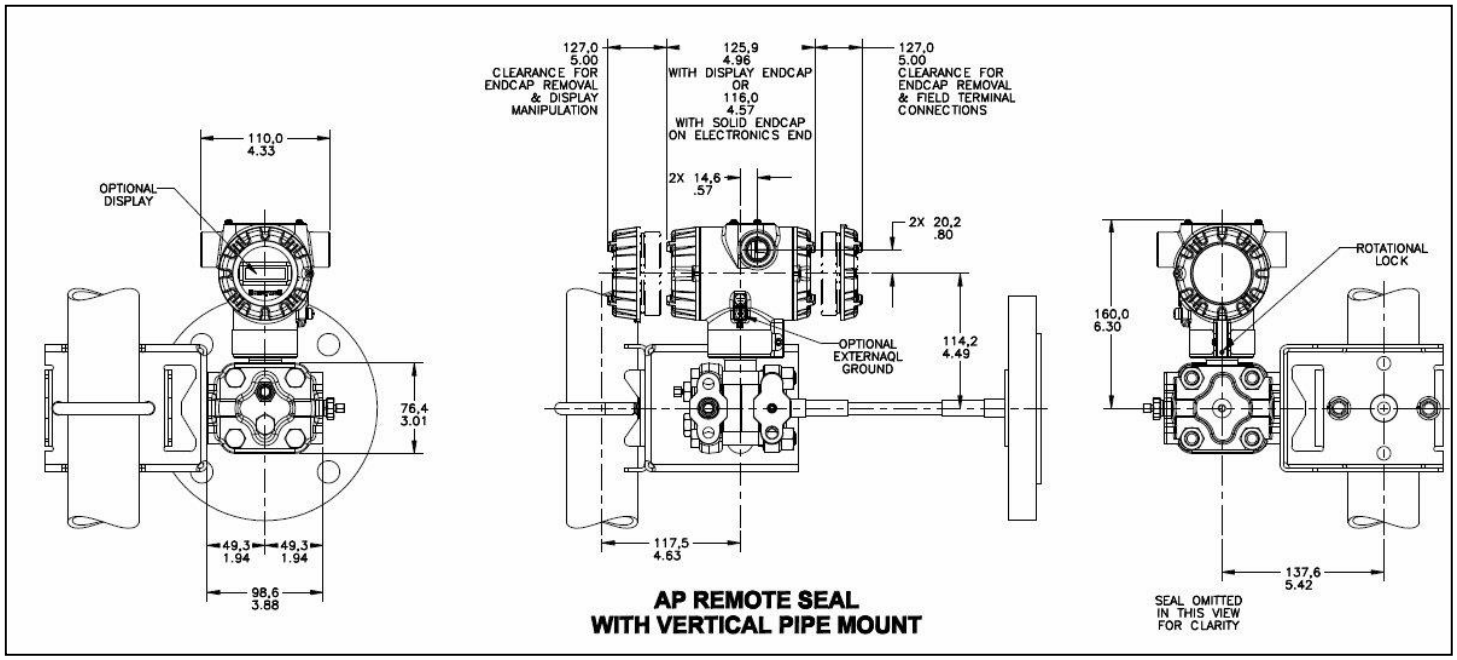

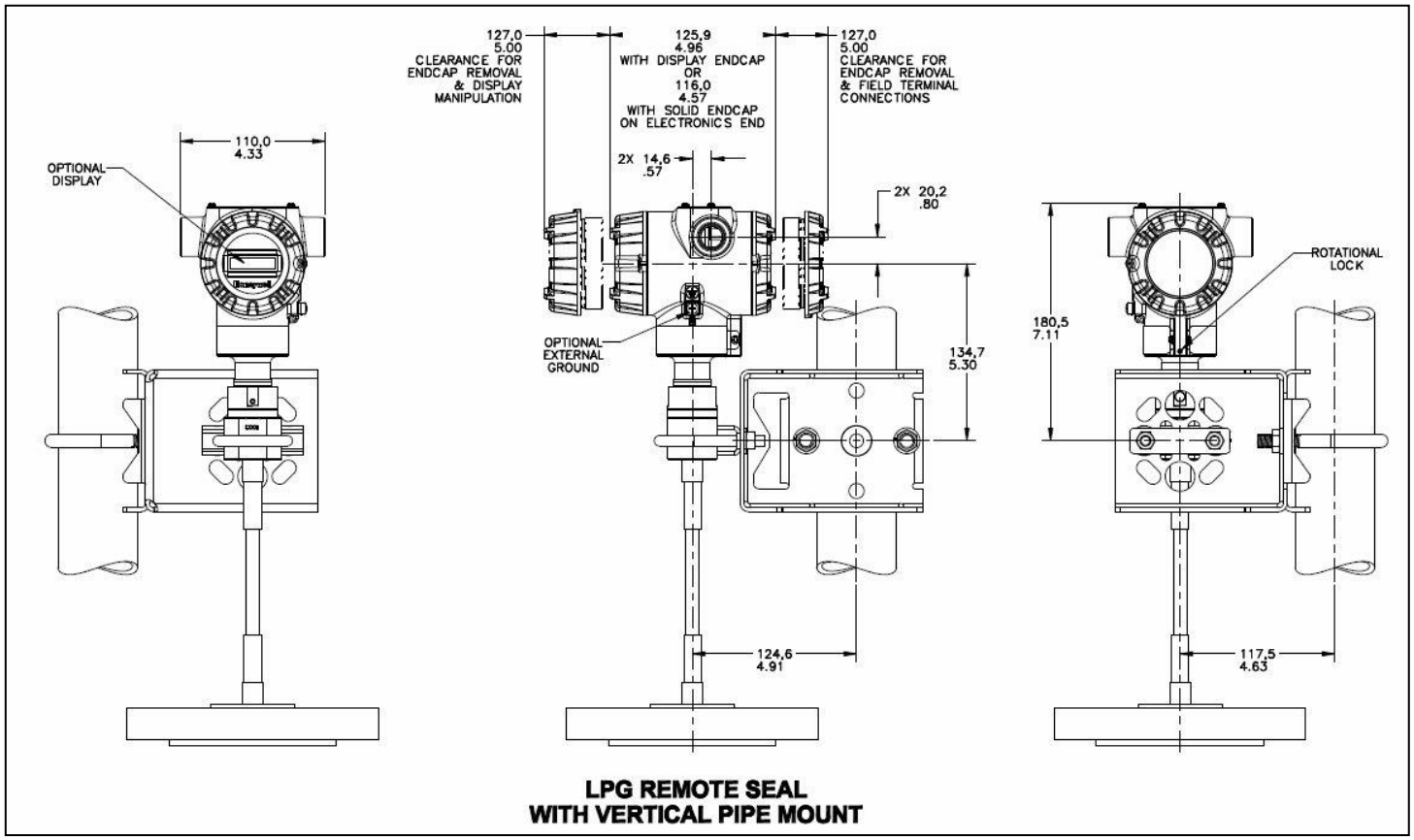

Figure 8 — Approximate vertical mounting dimensions for Remote Seal Transmitter

Reference Dimensions (cont'd)

Flush Flanged Seal Dimensions

Type	ANSI/DIN Rating	Flange Material	Wetted Materials: Diaphragm	Wetted Materials: Body	Construction See figure	↔ A	↕ B
Flush Flanged Seal	3" Class 150#	CS	SS	SS	D	7.5	1.37
			Hastelloy C	SS	C		
			Hastelloy C	Hastelloy C	D		
			Monel	Monel	D		
			Tantalum	SS	C		
		SS	SS	N/A	B	7.50	0.94
			Hastelloy C	SS	A		
			Hastelloy C	Hastelloy C	D		1.37
			Monel	Monel	D		
			Tantalum	SS	C		
	3" Class 300#	CS	SS	SS	D	8.25	1.56
			Hastelloy C	SS	C		
			Hastelloy C	Hastelloy C	D		
			Monel	Monel	D		
			Tantalum	SS	C		
		SS	SS	N/A	B	8.25	1.12
			Hastelloy C	SS	A		
			Hastelloy C	Hastelloy C	D		1.56
			Monel	Monel	D		
			Tantalum	SS	C		
	3" Class 600#	CS	SS	SS	D	8.25	1.75
			Hastelloy C	SS	C		
			Hastelloy C	Hastelloy C	D		
			Monel	Monel	D		
			Tantalum	SS	C		
		SS	SS	N/A	B	8.25	1.5
			Hastelloy C	SS	A		
			Hastelloy C	Hastelloy C	D		1.75
			Monel	Monel	D		
			Tantalum	SS	C		
	DN80-PN40	CS	SS	SS	D	7.87	1.32
			Hastelloy C	SS	C		
			Hastelloy C	Hastelloy C	D		
			Monel	Monel	D		
			Tantalum	SS	C		
		SS	SS	N/A	B	7.87	0.94
			Hastelloy C	SS	A		
			Hastelloy C	Hastelloy C	D		1.32
			Monel	Monel	D		
			Tantalum	SS	C		

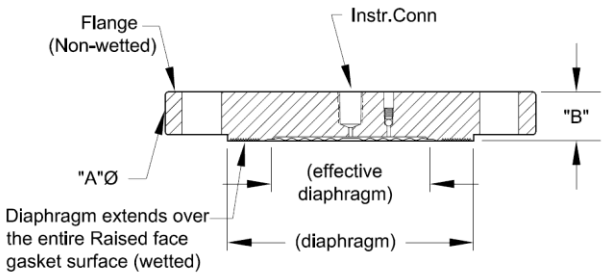

Configuration "HS"

Figure A

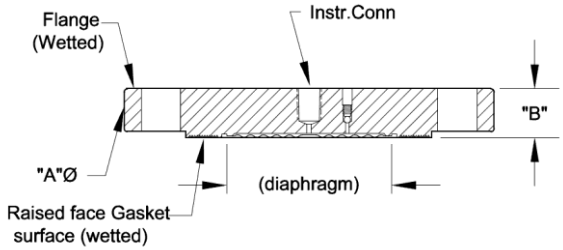

Configuration "HT"

Figure B

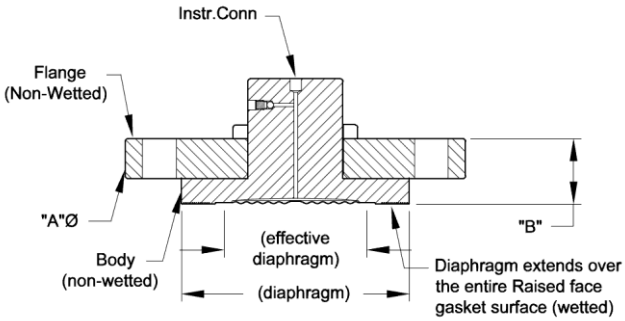

Configuration "IS"

Figure C

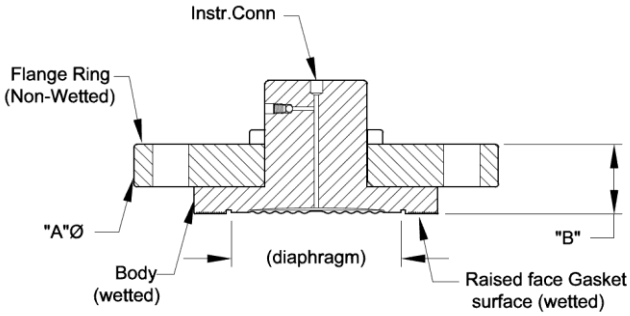

Configuration "IT"

Figure D

Figure 9— Seal Dimensions (Flush Flanged)

Reference Dimensions (cont'd)

Flush Flanged Seal with Lower

Type	ANSI/DIN Rating	Size	Dimension	2.4" Diaph. Dia. (in.)	2.9" Diaph. Dia. (in.)	4.1" Diaph. Dia. (in.)
Flush Flanged Seal with Lower	Class 150#	1/2"	A	3.50	4.00	5.25
			B0	1.72	1.72	1.84
			B1	1.72	1.72	1.84
			B2	2.22	2.22	2.34
		1"		4.25	4.00	5.25
			B0	1.12	1.72	1.84
				1.62	1.72	1.84
			B2	1.98	1.72	2.34
		1-1/2"		5.00	5.00	5.25
			B0	2.50	2.50	1.78
			B1	3.00	3.00	2.12
			B2	3.50	3.40	2.12
		2"	A	6.00	6.00	6.00
			B0	2.50	2.50	2.12
			B1	3.00	3.00	2.12
			B2	3.50	3.40	2.12
		3"	A	7.50	7.50	7.50
			B0	2.58	2.88	2.60
			B1	2.88	2.88	3.00
			B2	3.50	3.40	3.40
	Class 300#	1"	A	4.88	4.00	5.25
			B0	2.50	1.72	1.88
			B1	3.00	1.72	2.12
			B2	3.50	2.22	2.12
		1-1/2"	A	6.12	6.12	5.25
			B0	2.50	2.50	2.12
			B1	3.00	3.00	2.12
			B2	3.50	3.40	2.12
		2"	A	6.50	6.50	6.50
			B0	2.50	2.50	2.70
			B1	3.00	3.00	3.00
			B2	3.50	3.40	3.50
		3"	A	8.25	8.25	8.25
			B0	3.48	3.48	3.20
			B1	3.48	3.48	3.60
			B2	4.10	4.00	4.00
	Class 600#	1"	A	4.88	4.50	5.25
			B0	2.50	2.15	2.26
			B1	3.00	2.15	2.26
			B2	3.50	2.40	2.50
		1-1/2"	A	6.12	6.12	5.25
			B0	2.50	1.53	2.50
			B1	3.00	2.09	3.00
			B2	3.50	2.49	3.50
		2"	A	6.50	6.50	6.50
			B0	3.10	3.10	3.30
			B1	3.60	3.60	3.60
			B2	4.10	4.00	4.10
		3"	A	8.25	8.25	8.25
			B0	3.48	3.48	3.20
			B1	3.48	3.48	3.60
			B2	4.10	4.00	4.00

B0 Without Flush
B1 B Dimension with 1/4 NPT Flushing Connection
B2 B dimension with 1/2 NPT Flushing Connection

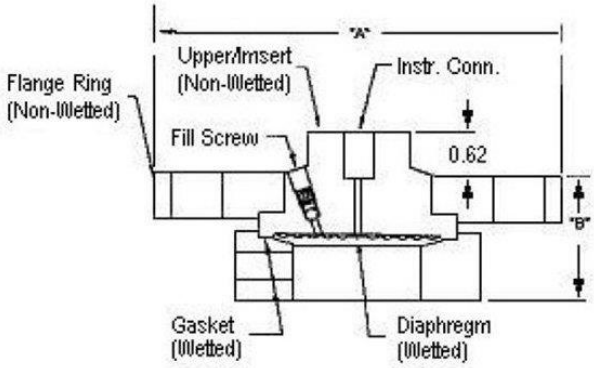

Flush Flanged Seal with Lower

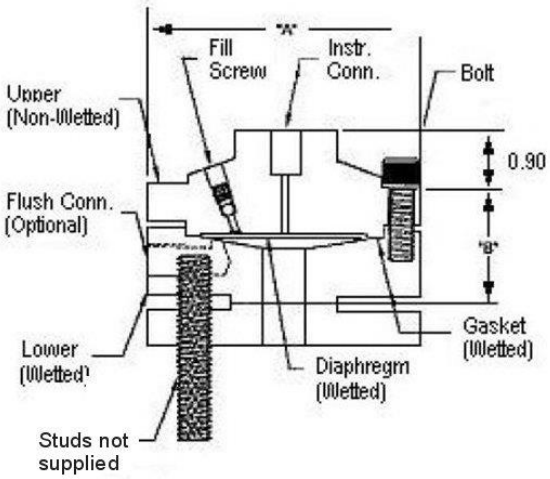

Flush Flanged Seal with Lower

Nte: 0.90 dimension is 0.70 for 4.1″ Dia Diaphragm

Figure 10 — Seal Dimension (Flush Flanged)

Reference Dimensions (cont'd)

Flanged Seal with Extended Diaphragm

Type	ANSI/DIN Rating	Dimension	2.8" Diaphragm Dia. (in.)	3.5" Diaphragm Dia. (in.)
Flanged Seal with Extended Diaphragm	3" Class 150#	A	7.50	-
		B	0.94	-
		C	2.80	-
	3" Class 300#	A	8.25	-
		B	1.12	-
		C	2.80	-
	DIN DN80-PN40	A	7.87	-
		B	0.94	-
		C	2.80	-
	4" Class 150#	A	-	9.00
		B	-	0.94
		C	-	3.70
	4" Class 300#	A	-	10.00
		B	-	1.25
		C	-	3.70
	DIN DN100-PN40	A	-	9.25
		B	-	0.94
		C	-	3.70

Designed to meet with schedule 40 pipe

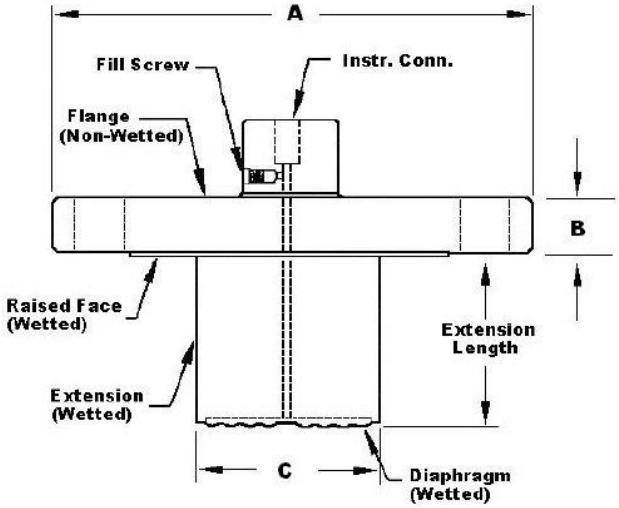

Figure 11 — Seal Dimensions (Extended Diaphragms)

Pancake Seal

Type	ANSI/DIN	Dimension	3.5" Diaph. (in.)
Pancake Seal	Class 150#, 300#, 600# DN80-PN40	A	5.00
		B	1.08

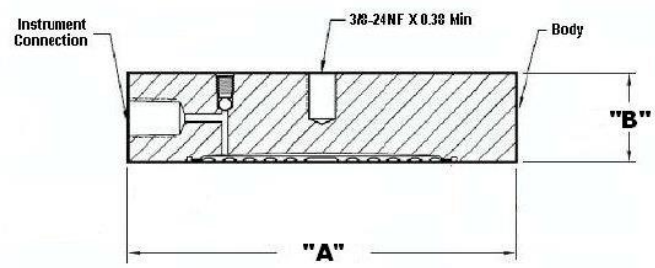

Figure 12— Seal Dimensions (Pancake)

Chemical Tee "Taylor Wedge" Seal

Type	Size	Dimension	3.5" Diaph. (in.)
Chemical Tee "Taylor Wedge" Seal	750 psi	A	5.00
		B	0.50

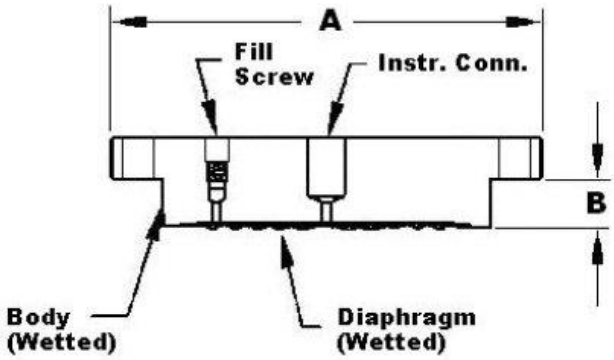

Figure 13— Seal Dimensions (Chemical TEE "Taylor Wedge" Seals

Seal with Threaded Process Connection

Type	Size	Dimension	2.4" Diaphragm Dia. (in.)	2.9" Diaphragm Dia. (in.)	4.1" Diaphragm Dia. (in.)
Threaded Process Conn. Seal	1/4" or 1/2"	A	3.50	4.00	5.25
		B0	1.66	1.66	1.79
		B1	1.66	1.66	1.79
		B2	2.18	2.16	2.14
	3/4" or 1"	A	3.50	4.00	5.25
		B0	1.66	1.66	1.79
		B1	1.66	1.66	1.79
		B2	8.25	2.16	2.14

B0 Without Flush
B1 B Dimension with 1/4 NPT Flushing Connection
B2 B dimension with 1/2 NPT Flushing Connection

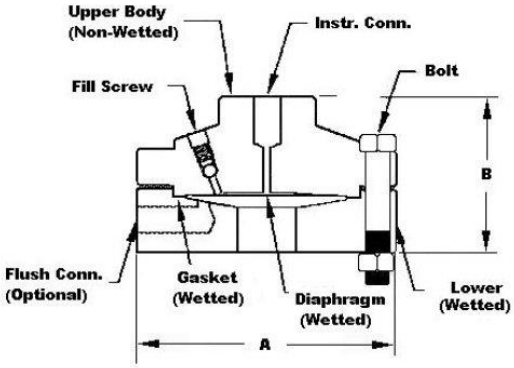

Figure 14— Seal Dimensions (Threaded Process Connection Seals)

Sanitary Seal

Type	Size	Dimension	1.9" Diaphragm Dia. (in.)	2.4" Diaphragm Dia. (in.)	2.9" Diaphragm Dia. (in.)	4.1" Diaphragm Dia. (in.)
Sanitery Seal	2"	A	2.50	-	-	-
		B	1.42	-	-	-
	2- 1/2"	A	-	3.00	-	-
		B	-	1.28	-	-
	3"	A	-	-	3.57	-
		B	-	-	1.38	-
	4"	A	-	-	-	4.68
		B	-	-	-	1.60

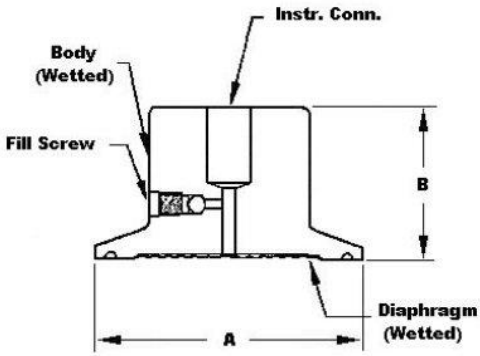

Figure 15- Seal Dimensions (Sanitary Seals)

Saddle Seal

Type	Size	Dimension	2.4" Diaph. (in.)
Saddle Seal	3"	A	3.50
		B	2.90
	4" or larger	A	3.50
		B	3.04

Note: Specify 6 or 8 bolt pattern

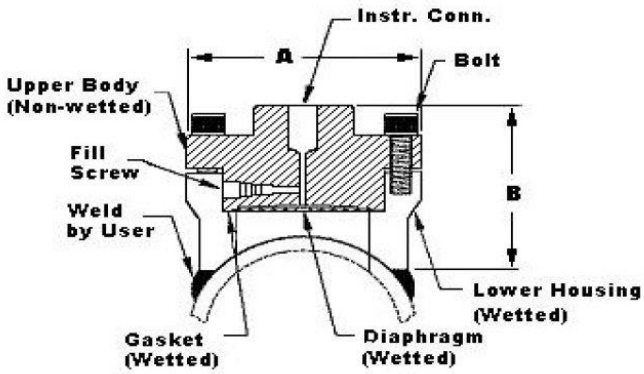

Figure 16 — Seal Dimensions (3" Saddle Seal)

Type	Size	Dimension	2.4" Diaph. (in.)
Saddle Seal	3"	A	3.50
		B	2.90
	4" or larger	A	3.50
		B	3.04

Note: Specify 6 or 8 bolt pattern

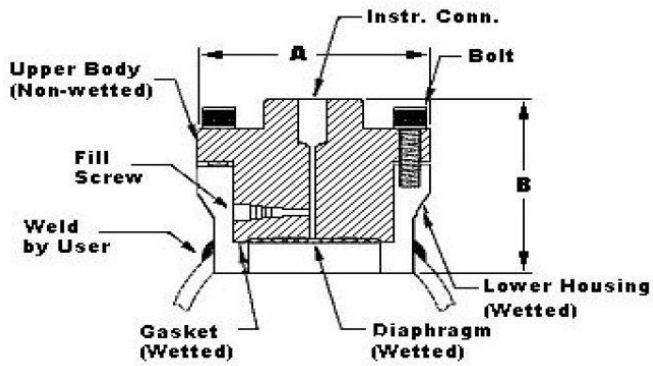

Figure 17— Seal Dimensions (4" Saddle Seal)

Calibration Ring

Type	Size	Rating	Dimension	1/4 NPT	1/2 NPT
Calibration Ring	3"	150# / 600#	A	5.00	5.00
			B	1.00	1.50
			C	3.00	3.00

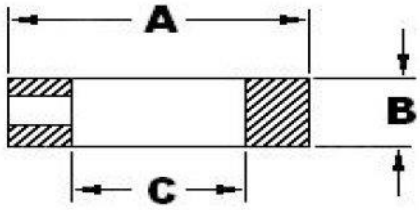

Figure 18— Calibration Ring

Communications Protocols & Diagnostics

HART Protocol

Version:

HART 7

Power Supply

Voltage: 10.8 to 42.4Vdc at terminals

Load: Maximum 1440 ohms See Figure 2.

Minimum Load: 0 ohms. (For handheld communications a minimum load of 250 ohms is required)

Foundation Fieldbus (FF)

Power Supply Requirements

Voltage: 9.0 to 32.0Vdc at terminals

Steady State Current: 17.6mAdc

Software Download Current: 27.4mAdc

Available Function Blocks

Block Type	Qty	Execution Time
Resource	1	n/a
Transducer	1	n/a
Diagnostic	1	n/a
Analog Input	1*	30 ms
PID w/Autotune	1	45 ms
Integrator	1	30 ms
Signal Char (SC)	1	30 ms
LCD Display	1	n/a
Flow Block	1	30 ms
Input Selector	1	30 ms
Arithmetic	1	30 ms

* AI block may have two (2) additional instantiations.

All available function blocks adhere to FOUNDATION Fieldbus standards. PID blocks support ideal & robust PID algorithms with full implementation of Auto-tuning.

Link Active Scheduler

Transmitters can perform as a backup Link Active Scheduler and take over when the host is disconnected. Acting as a LAS, the device ensures scheduled data transfers typically used for the regular, cyclic transfer of control loop data between devices on the Fieldbus.

Number of Devices/Segment

Entity IS model: 6 devices/segment

Schedule Entries

18 maximum schedule entries

Number of VCR's: 24 max

Compliance Testing: Tested according to ITK 6.0.1

Software Download

Utilizes Class-3 of the Common Software Download procedure as per FF-883 which allows the field devices of any manufacturer to receive software upgrades from any host.

Honeywell Digitally Enhanced (DE)

DE is a Honeywell proprietary protocol which provides digital communications between Honeywell DE enabled field devices and Hosts.

Power Supply

Voltage: 10.8 to 42.4Vdc at terminals

Load: Maximum 1440 ohms See Figure 2.

Standard Diagnostics

ST 800 top level diagnostics are reported as either critical or non-critical and readable via the DD/DTM tools or integral display as shown below.

Critical Diagnostics		
HART DD/DTM tools	**Advanced Display**	**Basic Display**
Electronic Module DAC Failure	Electronics Module fault	Electronics Module fault
Meter Body NVM Corrupt	Meterbody fault	Meterbody fault
Config Data Corrupt	Electronics Module fault	Electronics Module fault
Electronic Module Diag Failure	Electronics Module fault	Electronics Module fault
Meter Body Critical Failure	Meterbody fault	Meterbody fault
Sensor Comm Timeout	Meterbody Comm fault	Meterbody Comm fault

Non-Critical Diagnostics		
HART DD/DTM tools	**Advanced Display**	**Basic Display**
Display Failure	n/a	n/a
Electronic Module Comm Failure	n/a	n/a
Meter Body Excess Correct	Zero Correct (OK or EXCESSIVE) Span Correct (OK or EXCESSIVE)	n/a
Sensor Over Temperature	Meterbody Temp (OK, OVER TEMP)	n/a
Fixed Current Mode	Analog Out mode (Fixed or Normal)	n/a
PV Out of Range	Primary PV (OK or OVERLOAD)	n/a
No Factory Calibration	Factory Cal (OK, NO FACTORY CAL)	n/a
No DAC Compensation	DAC Temp Comp (OK, NO COMPENSATION)	n/a
LRV Set Error – Zero Config Button	n/a	n/a
URV Set Error – Span Config Button	n/a	n/a
AO Out of Range	n/a	n/a
Loop Current Noise	n/a	n/a
Meter Body Unreliable Comm	Meterbody Comm (OK, SUSPECT)	n/a
Tamper Alarm	n/a	n/a
No DAC Calibration	n/a	n/a
Sensor Supply Voltage Low	Supply Voltage (OK, LOW, or HIGH)	n/a

Refer to ST 800 diagnostics tech note for additional level diagnostics.

Other Certification Options

Materials

- NACE MRO175, MRO103, ISO15156

Approval Certifications:

AGENCY	TYPE OF PROTECTION	COMM. OPTION	FIELD PARAMETERS	AMBIENT TEMP (Ta)
FM Approvals™ USA	**Explosionproof:** Class I, Division 1, Groups A, B, C, D; **Dust Ignition Proof:** Class II, III, Division 1, Groups E, F, G; T6..T5 Class l, Zone 0/1, AEx db IIC T6..T5 Ga/Gb Class ll, Zone 21, AEx tb IIIC T95° Db	All	Note 1	T5: -50 °C to 85°C T6: -50 °C to 65°C
	Intrinsically Safe: Class I, II, III, Division 1, Groups A, B, C, D, E, F, G: T4 Class l, Zone 0, AEx ia IIC T4 Ga FISCO Field Device (Only for FF Option) Ex ia IIC T4 Ga; Ex ic IIC T4 Gc	4-20 mA / DE/ HART	Note 2a	-50 °C to 70°C
		Foundation Fieldbus	Note 2b	-50 °C to 70°C
	Nonincendive: Class I, Division 2, Groups A, B, C, D locations, T4 Class l, Zone 2, AEx nA IIC T4 Gc	4-20 mA / DE/ HART/ Foundation Fieldbus	Note 1	-50 °C to 85°C
	Enclosure: Type 4X/ IP66/ IP67	All	All	-
Canadian Standards Association (CSA) USA and Canada	**Explosion Proof:** Class I, Division 1, Groups A, B, C, D; **Dust Ignition Proof:** Class II, III, Division 1, Groups E, F, G; T6..T5 Class I Zone 1 AEx db IIC T6..T5 Ga/Gb Ex db IIC T6..T5 Ga/Gb Zone 22 AEx tb IIIC T95° Db Ex tb IIIC T95° Db	All	Note 1	T5: -50 °C to 85°C T6: -50 °C to 65°C
	Intrinsically Safe: Class I, II, III, Division 1, Groups A, B, C, D, E, F, G; T4 Class I Zone 0 AEx ia IIC T4 Ga Ex ia IIC T4 Ga FISCO Field Device (Only for FF Option) Ex ia IIC T4 Ga; Ex ic IIC T4 Gc	4-20 mA / DE/ HART	Note 2a	-50 °C to 70°C
		Foundation Fieldbus	Note 2b	-50 °C to 70°C
	Nonincendive: Class I, Division 2, Groups A, B, C, D; T4 Class I Zone 0 AEx nA IIC T4 Gc Ex nA IIC T4 Gc	4-20 mA / DE/ HART/ Foundation Fieldbus	Note 1	-50 °C to 85°C
	Enclosure: Type 4X/ IP66/ IP67	All	All	-

Approval Certifications: (Continued)

ATEX	**Flameproof:** II 1/2 G Ex db IIC T6..T5 Ga/Gb II 2 D Ex tb IIIC T95° Db	All	Note 1	T5: -50 °C to 85°C T6: -50 °C to 65°C
	Intrinsically Safe: II 1 G Ex ia IIC T4 Ga	4-20 mA / DE/ HART	Note 2a	-50 °C to 70°C
	FISCO Field Device (Only for FF Option) Ex ia IIC T4 Ga; Ex ic IIC T4 Gc	Foundation Fieldbus	Note 2b	-50 °C to 70°C
	Nonincendive: II 3 G Ex nA IIC T4 Gc	4-20 mA / DE/ HART/ Foundation Fieldbus	Note 1	-50 °C to 85°C
	Enclosure: IP66/ IP67	All	All	-
IECEx World	**Flameproof :** Ex db IIC T6..T5 Ga/Gb Ex tb IIIC Db T 95°C Db	All	Note 1	T5: -50 °C to 85°C T6: -50 °C to 65°C
	Intrinsically Safe: Ex ia IIC T4 Ga	4-20 mA / DE/ HART	Note 2a	-50 °C to 70°C
	FISCO Field Device (Only for FF Option) Ex ia IIC T4 Ga; Ex ic IIC T4 Gc	Foundation Fieldbus	Note 2b	-50 °C to 70°C
	Nonincendive: Ex nA IIC T4 Gc	4-20 mA / DE/ HART/ Foundation Fieldbus	Note 1	-50 °C to 85°C
	Enclosure: IP66/ IP67	All	All	-
SAEx South Africa	**Flameproof :** Ex d IIC Ga/Gb T4 Ex tb IIIC Db T 95°C	All	Note 1	-50 °C to 85°C
	Intrinsically Safe: Ex ia IIC Ga T4	4-20 mA / DE/ HART	Note 2a	-50 °C to 70°C
	FISCO Field Device (Only for FF Option) Ex ia IIC T4 Ga; Ex ic IIC T4 Gc	Foundation Fieldbus	Note 2b	-50 °C to 70°C
	Nonincendive: Ex nA IIC Gc T4	4-20 mA / DE/ HART/ Foundation Fieldbus	Note 1	-50 °C to 85°C
	Enclosure: IP66/ IP67	All	All	-
INMETRO Brazil	**Flameproof:** Ex db IIC T6..T5 Ga/Gb Ex tb IIIC T 95°C Db	All	Note 1	50 °C to 85°C
	Intrinsically Safe: Ex ia IIC T4 Ga	4-20 mA / DE/ HART	Note 2a	50 °C to 70°C
	FISCO Field Device (Only for FF Option) Ex ia IIC T4 Ga; Ex ic IIC T4 Gc	Foundation Fieldbus	Note 2b	50 °C to 70°C
	Nonincendive: Ex nA IIC T4 Gc	4-20 mA / DE/ HART/ Foundation Fieldbus	Note 1	-50 °C to 85°C
	Enclosure : IP 66/67	All	All	-

Approval Certifications: (Continued)

NEPSI China	**Flameproof:** Ex d IIC Ga/Gb T4 Ex tb IIIC Db T 85°C	All	Note 1	-50 °C to 85°C
	Intrinsically Safe: Ex ia IIC Ga T4	4-20 mA / DE/ HART	Note 2a	-50 °C to 70°C
	FISCO Field Device (Only for FF Option) Ex ia IIC T4	Foundation Fieldbus	Note 2b	-50 °C to 70°C
	Nonincendive: Ex nA IIC Gc T4	4-20 mA / DE/ HART/ Foundation Fieldbus	Note 1	-50 °C to 85°C
	Enclosure : IP 66/67	All	All	-
EAC Russia, Belarus and Kazakhstan	**Flameproof:** 1 Ex d IIC Ga/Gb T4 Ex tb IIIC Db T 85°C	All	Note 1	-50 °C to 85°C
	Intrinsically Safe: 0 Ex ia IIC Ga T4	4-20 mA / DE/ HART	Note 2a	-50 °C to 70°C
	FISCO Field Device (Only for FF Option) Ex ia IIC T4	Foundation Fieldbus	Note 2b	-50 °C to 70°C
	Enclosure : IP 66/67	All	All	
KOSHA Korea	**Flameproof :** Ex d IIC T6..T5 Ex tD T 95°C	All	Note 1	T6: Ta= -50 °C to 65°C T5: Ta= -50 °C to 85°C
	Intrinsically Safe: Ex ia IIC T4	4-20 mA / DE/ HART	Note 2a	Ta= -50 °C to 70°C
		Foundation Fieldbus	Note 2b and 2c	Ta= -50 °C to 70°C
	Enclosure: IP66/ IP67	All	All	-

Notes:

1. Operating Parameters:

   Voltage= 11 to 42 V DC Current= 4-20 mA Normal
   = 10 to 30 V (FF) = 30 mA (FF)

2. Intrinsically Safe Entity Parameters

   a. Analog/ DE/ HART Entity Values:

   Vmax= Ui = 30V Imax= Ii= 105mA Ci = 4.2nF Li =984 uH Pi =0.9W

   Transmitter with Terminal Block Revision E or Later

   Vmax= Ui = 30V Imax= Ii= 225mA Ci = 4.2nF Li = 0 Pi =0.9W

   Note : Transmitter with Terminal Block Revision E or later

   The revision is on the label that is on the module. There will be two lines of text on the label:

   - First is the Module Part #: 50049839-001 or 50049839-002
   - Second line has the supplier information, along with the REVISION:

   XXXXXXX-EXXXX, THE "X" is production related, THE POSITION of the "E" IS THE REVISION.

   b. Foundation Fieldbus- Entity Values

   Vmax= Ui = 30V Imax= Ii= 180mA Ci = 0nF Li = 984 uH Pi =1W

   Transmitter with Terminal Block Revision F or Later

   Vmax= Ui = 30V Imax= Ii= 225mA Ci =0nF Li = 0 Pi =1 W

FISCO Field Device Imax= Ii= 380 mA Ci = 0nF Li = 0 Pi =5.32 W
Vmax= Ui = 17.5V
Note : Transmitter with Terminal Block Revision F or later
The revision is on the label that is on the module. There will be two lines of text on the label:

- First is the Module Part #: 50049839-003 or 50049839-004
- Second line has the supplier information, along with the REVISION:

XXXXXXX-EXXXX, THE "X" is production related, THE POSITION of the "E" IS THE REVISION.

Approval Certifications: (Continued)

Marine Certificates	This certificate defines the certifications covered for the SmartLine Pressure Transmitter family of products, including the SMV SmartLine Multivariable Transmitter. It represents the compilation of the five certificates Honeywell currently has covering the certification of these products into marine applications.
	American Bureau of Shipping (ABS) - 2009 Steel Vessel Rules 1-1-4/3.7, 4-6-2/5.15, 4-8-3/13 & 13.5, 4-8-4/27.5.1, 4-9-7/13. Certificate number: 04-HS417416-PDA
	Bureau Veritas (BV) - Product Code: 389:1H. Certificate number: 12660/B0 BV
	Det Norske Veritas (DNV) - Location Classes: Temperature D, Humidity B, Vibration A, EMC B, Enclosure C. For salt spray exposure; enclosure of 316 SST or 2-part epoxy protection with 316 SST bolts to be applied. Certificate number: A-11476
	Korean Register of Shipping (KR) - Certificate number: LOX17743-AE001
	Lloyd's Register (LR) - Certificate number: 02/60001(E1) & (E2)
SIL 2/3 Certification	IEC 61508 SIL 2 for non-redundant use and SIL 3 for redundant use according to EXIDA and TÜV Nord Sys Tec GmbH & Co. KG under the following standards: IEC61508-1: 2010; IEC 61508-2: 2010; IEC61508-3: 2010.
MEASUREMENT INTRUMENTS DIRECTIVE (MID) 2004/ 22/ EC	**Certificate Issued by** NMI Certin B.V. **Mechanical Class:** M3 **Electromagnetic Environment:** E3 **Ambient Temperature Range:** -25 ºC to + 55 ºC

Unit	Custom Calibration
STD820	0 to 1000 mBar
STD830	0 to 7 Bar
STA84L	0 to 35 Bar A
STG84L	0 to 35 Bar
STD870	0 to 100 Bar
STA87L	0 to 100 Bar A
STG87L	0 to 100 Bar

Application Data

Liquid Level: Closed Tank

Determine the minimum and maximum pressure differentials to be measured (Figure 19).

PMin = (SGp x a) - (SGf x d)
= LRV when HP at bottom of tank
= –URV when LP at bottom of tank

PMax = (SGp x b) - (SGf x d)
= URV when HP at bottom of tank
= –LRV when LP at bottom of tank

Where:

minimum level at 4mA
maximum level at 20 mA

a = distance between bottom tap and minimum level

b = distance between bottom tap and maximum level

d = distance between taps

SG_f = Specific Gravity of capillary fill fluid (See Page 6 “Material Specifications” for values.)

SG_p = Specific Gravity of process fluid

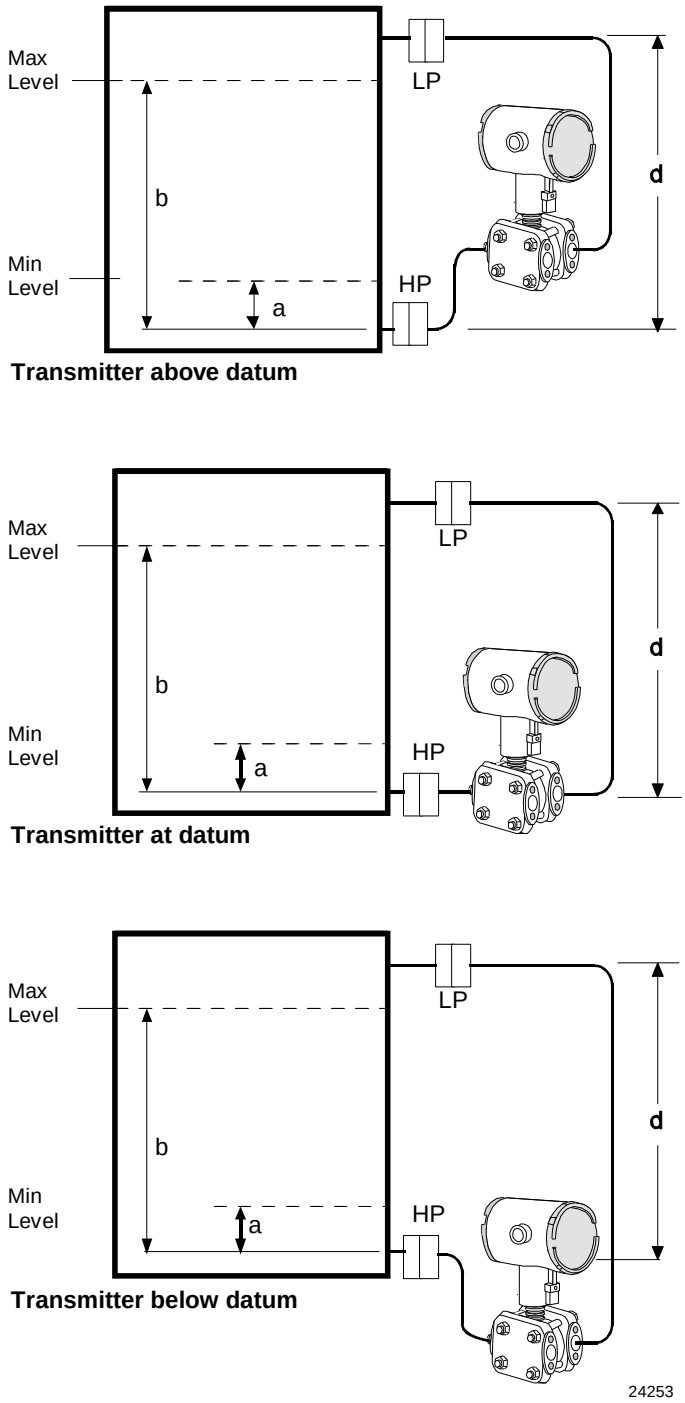

Figure 19—Closed tank liquid level measurement distance

Application Data (Cont'd)

Density or Interface*

Calculate the minimum and maximum pressure differentials to be measured (**Figure 20**).

$P_{min} = (SG_{min} – SG_f) \times (d)$;
minimum density, 4mA output

$P_{max} = (SG_{max} – SG_f) \times (d)$;
maximum density, 20mA output

Where:

d = distance between the taps

SG_{max} = maximum Specific Gravity

SG_{min} = minimum Specific Gravity

SG_f = Specific Gravity of capillary fill fluid (See Page 6 "Material Specifications" for values.)

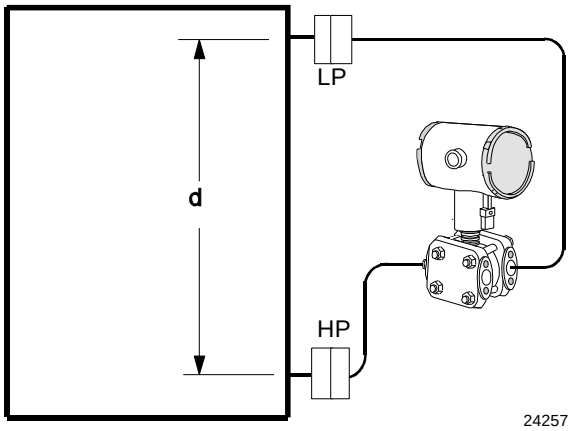

Figure 20—Density, direct acting transmitter configuration

Seal Configurations

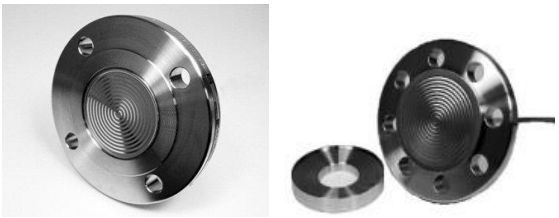

Figure 21—Flush Flange Seals and with left lower

Flush Flange Seals can be used with differential, gauge and absolute pressure transmitters and are available with 3" ANSI Class 150, ANSI Class 300 and DIN DN80-PN40 process connections. Flush flange seals can also be provided with Lowers. Lowers are essentially calibration rings, which allow flushing connections if needed.

Figure 22— Flange Seal with Extended Diaphragm

Flange Seal with Extended Diaphragm can be used with differential, gauge and absolute pressure transmitters and are available with 3" and 4" ANSI Class 150, ANSI Class 300, DIN DN80-PN40 and DIN DN100-PN40 process connections. 2", 4" and 6" extension lengths are available

.

Figure 23—Pancake Seals

Pancake Seals can be used with differential, gauge and absolute pressure transmitters and are available with 3" ANSI Class 150, 300 and 600 process connections.

Figure 24— Chemical Tee "Taylor" Wedge

Chemical Tee "Taylor" Wedge can be used with differential pressure transmitters and are available with Taylor Wedge 5" O.D. process connection.

Seal Configurations (cont'd)

Figure 25— Seals with Threaded Process Connections

Seals with Threaded Process Connections can be used with differential, gauge and absolute pressure transmitters and are available with ½", ¾" and 1" NPT Female process connections.

Figure 26— Sanitary Seals

Sanitary Seals can be used with differential, gauge and absolute pressure transmitters and are available with 3" and 4" Tri-Clover-Tri-Clamp process connections.

Figure 27— Saddle Seals

Saddle Seals can be used with differential, gauge and absolute pressure transmitters and are available with 3" and 4" (6 bolt or 8 bolt designs) process connections.

Figure 28— Calibration Rings

Calibration Rings are available with Flush Flange Seals and Pancake Seals. Flushing ports (1/4" or ½") are available with calibration rings.

Figure 29— Stainless Steel Armor and PVC Coated Stainless Steel Armor Capillaries

Stainless Steel Armor and PVC Coated Stainless Steel Armor Capillaries are available with Honeywell Remote Seal Solutions.

Figure 30— 2" Stainless Steel Nipples

2" Stainless Steel Nipples are available for Close-Coupled remote seal solutions

Figure 31— Welded Meter Body for All-Welded Remote Seal Solution

Welded Meter Body for All-Welded Remote Seal Solution. The welded ST 800 meter body is an important part of an All-Welded Remote Seal Solution, which is commonly used in Vacuum applications.

Model Selection Guide

Model Selection Guides are subject to change and are inserted into the specifications as guidance only.

Model STR800
(DP, GP & AP) Remote Seals

Model Selection Guide
34-ST-16-88 Issue 21

Instructions

- Select the desired Key Number. The arrow to the right marks the selection available.
- Make selections from each Table (I, II and IX) using the column below the proper arrow.
- A (●) denotes unrestricted availability. A letter denotes restricted availability.
- Restrictions follow Table IX.

Key Number		I		II		III		IV		V		VI		VII		VIII		IX
STR _ _ _	-	_ _ _ _ _ _ _	-	_ _ _ _ _ _ _ _ _	-	_	-	_ _ _	-	_ _ _	-	_	-	_ _ _ _	-	_ _	+	0 0 0 0

KEY NUMBER	URL	LRL	Max Span	Min Span	Units	Selection	Availability	
Measurement Range Std Accuracy	400 (1000)	-400 (-1000)	400 (1000)	4 (10)	" H_2O (mbar)	STR82D	↓	
	100 (7)	-100 (-7)	100 (7)	1 (0.07)	psi (bar)	STR83D	↓	
	500 (35)	5.7 (0.39)	500 (35)	5 (0.35)	psia (bar A)	STR84A		↓
	500 (35)	-14.7 (-1.0)	500 (35)	5 (0.35)	psi (bar)	STR84G		↓
	3000 (210)	14.7 (-1.0)	3000 (210)	30 (2.1)	psi (bar)	STR87G		↓

Note: Remote seal system pressure rating is body rating or seal rating, whichever is less.

TABLE I	Description					Selection		
Meter Body & Capillaries	a. Number of Seals	1 Remote Seal (High Side)				1 _ _ _ _ _ _	●	●
		2 Remote Seals				2 _ _ _ _ _ _	●	
		1 Remote Seal (Low Side)				3 _ _ _ _ _ _	●	
	b. Primary Fill Fluid (Meter body)	Silicone Oil 200				_ 1 _ _ _ _ _	●	●
		Fluorinated Oil CTFE				_ 2 _ _ _ _ _	2	2
		Silicone Oil 704				_ 3 _ _ _ _ _	●	●
		NEOBEE® M-20 [11]				_ 4 _ _ _ _ _	●	●
	c. Construction	**Non-Wetted Adapter Head Materials**						
	In-Line Gauge/ Absolute	316 SS Bonnet				_ _ A _ _ _ _		●
		316 SS Bonnet for Close-Couple				_ _ B _ _ _ _		3
	Dual Head DP	316 SS (bolt-on heads)				_ _ C _ _ _ _	●	
		316 SS for Close-Couple				_ _ D _ _ _ _	3	
		316 SS with all-welded meter body				_ _ E _ _ _ _	4	
	d. Bolts and Nuts for Transmitter Heads	None				_ _ _ 0 _ _ _	22	●
		Carbon Steel Bolts and Nuts				_ _ _ C _ _ _	●	
		316 SS Bolts and Nuts				_ _ _ S _ _ _	●	
		A286 SS (NACE) Bolts and 304 SS (NACE) Nuts				_ _ _ N _ _ _	●	
		B7M (NACE) Bolts and 7M (NACE) Nuts				_ _ _ B _ _ _	●	
	e. Secondary Fill Fluid (capillary & seal)	No Fill Fluid				_ _ _ _ 0 _ _	5	5
		Silicone Oil 200				_ _ _ _ 1 _ _	●	●
		Fluorinated Oil CTFE				_ _ _ _ 2 _ _	●	●
		Silicone Oil 704				_ _ _ _ 3 _ _	●	●
		Neobee® M20 [11]				_ _ _ _ 4 _ _	●	●
		Syltherm® 800 [12]				_ _ _ _ 5 _ _	●	●
	f. Connection of Remote Seal to Meter Body 	No Capillary, No Nipple (Specify for VAM Unit Only)				_ _ _ _ _ 0 _	5	5
		Capillary Length	5 feet	1.5 m	SS Armor	_ _ _ _ _ A _	●	●
			10 feet	3.0 m		_ _ _ _ _ B _	●	●
			15 feet	4.5 m		_ _ _ _ _ C _	●	●
			20 feet	6.1 m		_ _ _ _ _ D _	●	●
			25 feet	7.5 m		_ _ _ _ _ E _	●	●
			35 feet	10.7 m		_ _ _ _ _ F _	●	●
			5 feet	1.5 m	PVC Coated SS Armor	_ _ _ _ _ G _	●	●
			10 feet	3.0 m		_ _ _ _ _ H _	●	●
			15 feet	4.5 m		_ _ _ _ _ J _	●	●
			20 feet	6.1 m		_ _ _ _ _ K _	●	●
			25 feet	7.5 m		_ _ _ _ _ L _	●	●
			35 feet	10.7 m		_ _ _ _ _ M _	●	●
		2 inch long SS nipple close-coupled				_ _ _ _ _ 2 _	6	6
	g. Seal Option	None				_ _ _ _ _ _ 0	●	●
		Std Gold Plated Seal Diaph. = 50 µin				_ _ _ _ _ _ 1	7	7
		Teflon Coated Seal Diaphragm - only for anti-sticking				_ _ _ _ _ _ 4	7	7

[11] Limited vacuum availability.

[12] Minimum static pressure requirement. No vacuum allowed. See Specifications 34-ST-03-88 Figure 15


In-Line Gauge


Dual Head DP


All welded

Note: When selecting required seal, you must specify only the 9 selections within the required seal type.

TABLE II	Description					Selection	STR84G & 87G & 84A	STR82D & 83D
Seals	No Seal Attached to Core Transmitter (Specify for VAM Unit Only)					0 0 0 0 0 0 0 0 0	21	21
	Seal Type	**Diaphragm Diameter**	**Flange Size**	**Flange Pressure Rating [1]**		**Selection**		
	Flush Flanged Seal 	3.5"	3"	ANSI Class 150		AFA _ _ _ _ _ _	●	●
				ANSI Class 300		AFC _ _ _ _ _ _	●	●
			80mm	DIN DN80-PN40		AFM _ _ _ _ _ _	●	●
		Wetted Material		**Diaphragm**	**Upper Insert**	**Selection**		
				316L SS	316L SS	_ _ _ AA _ _ _ _	●	●
				Hastelloy® C-276	316L SS	_ _ _ AB _ _ _ _	●	●
				Hastelloy® C-276	Hastelloy® C-276	_ _ _ AC _ _ _ _	●	●
				Monel 400®	Monel 400®	_ _ _ AE _ _ _ _	8	8
				Tantalum [5]	316L SS	_ _ _ AF _ _ _ _	8	8
		Non-Wetted Material (upper)		CS (Nickel Plated)		_ _ _ _ _ 1 _ _ _	●	●
				316L SS		_ _ _ _ _ 2 _ _ _	●	●
		Seal-Capillary Connection		Center Seal		_ _ _ _ _ _ 1 _ _	●	●
				Side Seal		_ _ _ _ _ _ 2 _ _	9	9
		Calibration Rings 		None		_ _ _ _ _ _ _ A _	●	●
				316L SS		_ _ _ _ _ _ _ B _	10	10
				Hastelloy® C-276		_ _ _ _ _ _ _ C _	10	10
				Monel 400®		_ _ _ _ _ _ _ D _	10	10
		Flushing Connections and Plugs [4] (Metal plug material will be the same as Cal. ring material if metal plug is chosen)		None		_ _ _ _ _ _ _ _ 0	●	●
				One 1/4" with plastic plug		_ _ _ _ _ _ _ _ H	11	11
				One 1/4" with metal plug		_ _ _ _ _ _ _ _ J	11	11
				Two 1/4" with plastic plugs		_ _ _ _ _ _ _ _ M	11	11
				Two 1/4" with metal plugs		_ _ _ _ _ _ _ _ N	11	11
				One 1/2" with plastic plug		_ _ _ _ _ _ _ _ P	11	11
				One 1/2" with metal plug		_ _ _ _ _ _ _ _ Q	11	11
				Two 1/2" with plastic plugs		_ _ _ _ _ _ _ _ R	11	11
				Two 1/2" with metal plugs		_ _ _ _ _ _ _ _ S	11	11

[1] Standard facing 125-250 AARH RF (raised face) serrated surface finish.
[4] Plastic Plugs are TEMPORARY ONLY to protect threads and MUST be REMOVED before installation
[5] Tantalum Upper insert has Tantalum wetted parts and 316 SS or CS non-wetted parts

Note: Remote seal system pressure rating is body rating or seal rating, whichever is less.

TABLE II	Descripton					Selection	STR84G & 87G & 84A	STR82D & 83D
	Seal Type	Diaphragm Diameter	Flange Size	Flange Pressure Rating [1]	Const. - See Spec. Figure 34-ST-03-88	Construction - See Spec. Figure 34-ST-03-88		
Seals (continued)	Flush Flanged Seal with Lower 	2.4"	1"	ANSI 150	22	BCA_ _ _ _ _ _	12	•
				ANSI 300	22	BCC _ _ _ _ _ _	12	•
			1-1/2"	ANSI 150	22	BGA_ _ _ _ _ _	12	•
				ANSI 300	22	BGC _ _ _ _ _ _	12	•
			2"	ANSI 150	22	BDA_ _ _ _ _ _	12	•
				ANSI 300	22	BDC _ _ _ _ _ _	12	•
			3"	ANSI 150	22	BFA_ _ _ _ _ _	12	•
				ANSI 300	22	BFC _ _ _ _ _ _	12	•
		2.9"	1/2"	ANSI 150	23	CAA_ _ _ _ _ _	•	•
			1"	ANSI 150	23	CCA_ _ _ _ _ _	•	•
				ANSI 300	23	CCC _ _ _ _ _ _	•	•
			1-1/2"	ANSI 150	22	CGA_ _ _ _ _ _	•	•
				ANSI 300	22	CGC _ _ _ _ _ _	•	•
			2"	ANSI 150	22	CDA_ _ _ _ _ _	•	•
				ANSI 300	22	CDC _ _ _ _ _ _	•	•
		4.1"	1/2"	ANSI 150	22	DAA_ _ _ _ _ _	•	•
			1"	ANSI 150	23	DCA_ _ _ _ _ _	•	•
				ANSI 300	23	DCC _ _ _ _ _ _	•	•
			1-1/2"	ANSI 150	23	DGA_ _ _ _ _ _	•	•
				ANSI 300	23	DGC _ _ _ _ _ _	•	•
			2"	ANSI 150	23	DDA_ _ _ _ _ _	•	•
				ANSI 300	22	DDC _ _ _ _ _ _	•	•
			3"	ANSI 150	22	DFA_ _ _ _ _ _	•	•
				ANSI 300	22	DFC _ _ _ _ _ _	•	•
		Wetted Material		Diaphragm	Lower	Selection		
				316L SS	316L SS	_ _ _ BA _ _ _ _	•	•
				Hastelloy® C-276	316L SS	_ _ _ BB _ _ _ _	•	•
				Hastelloy® C-276	Hastelloy® C-276	_ _ _ BC _ _ _ _	•	•
				Monel 400®	Monel 400®	_ _ _ BE _ _ _ _	8	8
				Tantalum	316L SS	_ _ _ BF _ _ _ _	8	8
				Tantalum	Hastelloy® C-276	_ _ _ BG _ _ _ _	8	8
				Tantalum	Tantalum Clad	_ _ _ BH _ _ _ _	13	13
		Non-Wetted Material (upper, upper insert)		Upper	Upper Insert	Selection		
				316L SS	316L SS	_ _ _ _ _ 4 _ _ _	•	•
				Carbon Steel	316L SS	_ _ _ _ _ 5 _ _ _	•	•
		Bolts [6]		No Selection		_ _ _ _ _ _ 0 _ _	•	•
		Flushing Connections and Plugs [4] (Metal plug material will be the same as Lower material, if metal plug is chosen - (SS Plug for CS Lower and Tantalum Clad)		None		_ _ _ _ _ _ _ 0 _	•	•
				One 1/4" with plastic plug		_ _ _ _ _ _ _ H _	•	•
				One 1/4" with metal plug		_ _ _ _ _ _ _ J _	•	•
				Two 1/4" with plastic plugs		_ _ _ _ _ _ _ M _	•	•
				Two 1/4" with metal plugs		_ _ _ _ _ _ _ N _	•	•
				One 1/2" with plastic plug		_ _ _ _ _ _ _ P _	•	•
				One 1/2" with metal plug		_ _ _ _ _ _ _ Q _	•	•
				Two 1/2" with plastic plugs		_ _ _ _ _ _ _ R _	•	•
				Two 1/2" with metal plugs		_ _ _ _ _ _ _ S _	•	•
		Gasket		Klinger® C-4401 (non-asbestos)		_ _ _ _ _ _ _ _ K	•	•
				Grafoil®		_ _ _ _ _ _ _ _ G	•	•
				Teflon®		_ _ _ _ _ _ _ _ T	•	•
				Gylon® 3510		_ _ _ _ _ _ _ _ L	15	15

[1] Standard facing 125-250 AARH RF (raised face) serrated surface finish.
[6] Bolt material will be same as Upper Material. However, if Table I bolts/nuts material is NACE or B7M, seal bolt material will be 304 SS NACE.
[4] Plastic Plugs are TEMPORARY ONLY to protect threads and MUST be REMOVED before installation
Note: Remote seal system pressure rating is body rating or seal rating, whichever is less.

TABLE II	Descripton					STR84G & 87G & 84A	STR82D & 83D
	Seal Type	Diaphragm Diameter	Flange Size	Flange Pressure Rating [1]		Selection		
Seals (continued)	 Flange Seal with Extended Diaphragm	2.8"	3" (2.8" OD extension)	ANSI Class 150		EFA _ _ _ _ _ _	•	•
				ANSI Class 300		EFC _ _ _ _ _ _	•	•
				DIN DN80-PN40		EFM _ _ _ _ _ _	•	•
		3.5"	4" (3.70" OD extension	ANSI Class 150		FGA _ _ _ _ _ _	•	•
				ANSI Class 300		FGC _ _ _ _ _ _	•	•
				DIN DN100-PN40		FGP _ _ _ _ _ _	•	•
		Wetted Material		Diaphragm	Ext. Tube	Selection		
				316L SS	316L SS	_ _ _ EA _ _ _ _	•	•
				Hastelloy® C-276	316L SS	_ _ _ EB _ _ _ _	•	•
				Hastelloy® C-276	Hastelloy® C-276	_ _ _ EC _ _ _ _	•	•
		Non-Wetted Material (flange)		CS (Nickel Plated)		_ _ _ _ _ 7 _ _ _	•	•
				316L SS		_ _ _ _ _ 8 _ _ _	•	•
		Bolts		No Selection		_ _ _ _ _ _ 0 _ _	•	•
		Extension Length		2"		_ _ _ _ _ _ _ 2 _	•	•
				4"		_ _ _ _ _ _ _ 4 _	•	•
				6"		_ _ _ _ _ _ _ 6 _	•	•
	No Selection	No Selection		No Selection		_ _ _ _ _ _ _ _ 0	•	•

TABLE II	Descripton					STR84G & 87G & 84A	STR82D & 83D
	Seal Type	Diaphragm Diameter	Flange Size	Flange Pressure Rating Dependent on Customer Flange [1]		Selection		
Seals (continued)	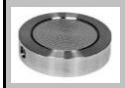 Pancake Seal	3.5"	3"	ANSI Class 150/300/600		GFA _ _ _ _ _ _	•	•
		Wetted Material		Diaphragm	Body			
				316L SS	316L SS	_ _ _ GA _ _ _ _	•	•
				Hastelloy® C-276	316L SS	_ _ _ GB _ _ _ _	•	•
				Hastelloy® C-276	Hastelloy® C-276	_ _ _ GC _ _ _ _	•	•
				Monel 400®	Monel 400®	_ _ _ GE _ _ _ _	8	8
				Tantalum	Tantalum [7]	_ _ _ GG _ _ _ _	8	8
		Non-Wetted Material		No Selection		_ _ _ _ _ 0 _ _ _	•	•
		Bolts		No Selection		_ _ _ _ _ _ 0 _ _	•	•
		Calibration Rings 		None		_ _ _ _ _ _ _ A _	•	•
				316L SS		_ _ _ _ _ _ _ B _	10	10
				Hastelloy® C-276		_ _ _ _ _ _ _ C _	10	10
				Monel 400®		_ _ _ _ _ _ _ D _	10	10
		Flushing Connections and Plugs[4] (Metal plug material will be the same as Cal. Ring material, if metal plug is chosen)		None		_ _ _ _ _ _ _ _ 0	•	•
				One 1/4" with plastic plug		_ _ _ _ _ _ _ _ H	11	11
				One 1/4" with metal plug		_ _ _ _ _ _ _ _ J	11	11
				Two 1/4" with plastic plugs		_ _ _ _ _ _ _ _ M	11	11
				Two 1/4" with metal plugs		_ _ _ _ _ _ _ _ N	11	11
				One 1/2" with plastic plug		_ _ _ _ _ _ _ _ P	11	11
				One 1/2" with metal plug		_ _ _ _ _ _ _ _ Q	11	11
				Two 1/2" with plastic plugs		_ _ _ _ _ _ _ _ R	11	11
				Two 1/2" with metal plugs		_ _ _ _ _ _ _ _ S	11	11

[1] Standard facing 125-250 AARH RF (raised face) serrated surface finish.
[4] Plastic Plugs are TEMPORARY ONLY to protect threads and MUST be REMOVED before installation
[7] Tantalum Body has Tantalum wetted parts and 316 SS non-wetted parts
Note: Remote seal system pressure rating is body rating or seal rating, whichever is less.

TABLE II	Descripton					STR84G & 87G & 84A	STR82D & 83D
	Seal Type	Diaphragm Diameter	Flange Size	Flange Pressure Rating [1]		Selection		
Seals (continued)	 Chemical Tee "Taylor" Wedge	3.5"	Taylor Wedge 5" O.D.	750 psi		HM0 _ _ _ _ _ _	16	
		Wetted Material		Diaphragm	Body	Selection		
				316L SS	316L SS	_ _ _ HA _ _ _ _	•	
				Hastelloy® C-276	316L SS	_ _ _ HB _ _ _ _	•	
				Hastelloy® C-276	Hastelloy® C-276	_ _ _ HC _ _ _ _	•	
		Non-Wetted Material		No Selection		_ _ _ _ _ 0 _ _ _	•	
		Bolts		No Selection		_ _ _ _ _ _ 0 _ _	•	
		Styles		No Selection		_ _ _ _ _ _ _ 0 _	•	
		No Selection		No Selection		_ _ _ _ _ _ _ _ 0	•	

Table II continued below

TABLE II	Descripton						STR84G & 87G & 84A	STR82D &83D
	Seal Type	Diaphragm Diameter	Threaded Process Connection Size (NPT Female)	Pressure Rating: CS Bolts	Pressure Rating: 304 SS Bolts	Selection		
Seals (continued)	 Seal with Threaded Process Connection	2.4"	1/2 NPT	2,500 psi	1,250 psi	JJG _ _ _ _ _ _	12	•
			3/4 NPT			JKG _ _ _ _ _ _	12	•
			1 NPT			JLG _ _ _ _ _ _	12	•
		2.9"	1/2 NPT	2,500 psi	1,250 psi	KJG _ _ _ _ _ _	•	•
			3/4 NPT			KKG _ _ _ _ _ _	•	•
			1 NPT			KLG _ _ _ _ _ _	•	•
		4.1"	1/2 NPT	1,500 psi	750 psi	LJG _ _ _ _ _ _	•	•
			3/4 NPT			LKG _ _ _ _ _ _	•	•
			1 NPT			LLG _ _ _ _ _ _	•	•
		Wetted Material	Diaphragm	Lower		Selection		
			316L SS	Carbon Steel		_ _ _ JA _ _ _ _	•	•
			316L SS	316L SS		_ _ _ JB _ _ _ _	•	•
			Hastelloy® C-276	316L SS		_ _ _ JC _ _ _ _	•	•
			Hastelloy® C-276	Hastelloy® C-276		_ _ _ JD _ _ _ _	•	•
			Monel 400®	Monel 400®		_ _ _ JE _ _ _ _	8	8
			Tantalum	316L SS		_ _ _ JF _ _ _ _	8	8
			Tantalum	Hastelloy® C-276		_ _ _ JG _ _ _ _	8	8
		Non-Wetted Material (upper)	CS (Nickel Plated)			_ _ _ _ _ A _ _ _	•	•
			316 Stainless Steel			_ _ _ _ _ C _ _ _	17	17
		Bolts [8]	Carbon Steel			_ _ _ _ _ _ C _ _	•	•
			304 SS			_ _ _ _ _ _ D _ _	•	•
		Flushing Connections and Plugs[4] (Metal plug material will be the same as Lower material, if metal plug is chosen - (SS Plug for CS Lower and Tantalum Clad)	None			_ _ _ _ _ _ _ 0 _	•	•
			One 1/4" with plastic plug			_ _ _ _ _ _ _ H _	•	•
			One 1/4" with metal plug			_ _ _ _ _ _ _ J _	•	•
			Two 1/4" with plastic plugs			_ _ _ _ _ _ _ M _	•	•
			Two 1/4" with metal plugs			_ _ _ _ _ _ _ N _	•	•
			One 1/2" with plastic plug			_ _ _ _ _ _ _ P _	18	18
			One 1/2" with metal plug			_ _ _ _ _ _ _ Q _	18	18
			Two 1/2" with plastic plugs			_ _ _ _ _ _ _ R _	18	18
			Two 1/2" with metal plugs			_ _ _ _ _ _ _ S _	18	18
		Gasket	Klinger® C-4401 (non-asbestos)			_ _ _ _ _ _ _ _ K	•	•
			Grafoil®			_ _ _ _ _ _ _ _ G	•	•
			Teflon®			_ _ _ _ _ _ _ _ T	•	•
			Gylon® 3510			_ _ _ _ _ _ _ _ L	15	15

[1] Standard facing 125-250 AARH RF (raised face) serrated surface finish.

[4] Plastic Plugs are TEMPORARY ONLY to protect threads and MUST be REMOVED before installation

[8] If Table I Bolts and Nuts material option is NACE, Bolts and Nuts will ship with Alloy Steel NACE and MAWP may change.

Note: Remote seal system pressure rating is body rating or seal rating, whichever is less.

TABLE II	Descripton					STR84G & 87G & 84A	STR82D & 83D
	Seal Type	Diaphragm Diameter	Flange Size	Pressure Rating	Selection		
Seals (continued)	 Sanitary Seal [9]	1.9"	2"	Customer clamp rating or 600 psi, whichever is less	MD0 _ _ _ _ _ _		19
		2.4"	2-1/2"		NE0 _ _ _ _ _ _	20	19
		2.9"	3"		PF0 _ _ _ _ _ _	19	19
		4.1"	4"		QG0 _ _ _ _ _ _	19	19
		Wetted Material	Diaphragm	Body	Selection		
			316L SS	316L SS	_ _ _ N A _ _ _ _	•	•
		Non-Wetted Material	No Selection		_ _ _ _ _ 0 _ _ _	•	•
		Bolts	No Selection		_ _ _ _ _ _ 0 _ _	•	•
		Styles	Tri-Clover Tri-Clamp®		_ _ _ _ _ _ _ 8 _	•	•
		Gasket	No Selection		_ _ _ _ _ _ _ _ 0	•	•

TABLE II	Descripton						STR84G & 87G & 84A	STR82D & 83D
	Seal Type	Diaphragm Diameter	Size and Bolt Pattern	Seal Pressure Rating: C.S. Bolts	Seal Pressure Rating: 316 SS Bolts	Selection		
Seals (continued)	 Saddle Seal	2.4" **8-Bolt** Design	for 3" Pipe ≥ 4" pipe	2,500 psi	1,250 psi	RFK _ _ _ _ _ _	12	•
						RGK _ _ _ _ _ _	12	•
		2.4" **6-Bolt** Design	for 3" Pipe ≥ 4" pipe	2,000 psi	1,000 psi	RPK _ _ _ _ _ _	12	•
						RQK _ _ _ _ _ _	12	•
		Wetted Material		Diaphragm	Lower Housing	Selection		
				316L SS	Carbon Steel	_ _ _ RA _ _ _ _	•	•
				316L SS	316L SS	_ _ _ RB _ _ _ _	•	•
				Hastelloy® C-276	316L SS	_ _ _ RC _ _ _ _	•	•
				Hastelloy® C-276	Hastelloy® C-276	_ _ _ RD _ _ _ _	•	•
				316L SS	N/A-Body Only [10]	_ _ _ SB _ _ _ _	•	•
				Hastelloy® C-276	N/A-Body Only [10]	_ _ _ SC _ _ _ _	•	•
		Non-Wetted Material		Body	Bolts [10,11]	Selection		
				Carbon Steel	Carbon Steel	_ _ _ _ _ B _ _ _	8	8
				316L SS	316 SS	_ _ _ _ _ _ C _ _ _	•	•
		Bolts		No Selection		_ _ _ _ _ _ 0 _ _	•	•
		Styles		No Selection		_ _ _ _ _ _ _ 0 _	•	•
		Gasket		Klinger® C-4401 (non-asbestos)		_ _ _ _ _ _ _ _ K	•	•
				Grafoil®		_ _ _ _ _ _ _ _ G	•	•
				Teflon®		_ _ _ _ _ _ _ _ T	•	•
				Gylon® 3510		_ _ _ _ _ _ _ _ L	•	•

[9] All sanitary seals have dairy grade 3A approval.

[10] Bolts are not included with "body only" selection.

[11] If Table I Bolts and Nuts material option is NACE, seal bolt material will be 304 SS NACE.

Note: Remote seal system pressure rating is body rating or seal rating, whichever is less.

TABLE III	Agency Approvals (see data sheet for Approval Code Details)	STR84G & 87G & 84A	STR82D & 83D
Approvals	No Approvals Required	0	●	●
	FM Explosion proof, Intrinsically Safe, Non-incendive, & Dustproof	A	●	●
	CSA Explosion proof, Intrinsically Safe, Non-incendive, & Dustproof	B	●	●
	ATEX Explosion proof, Intrinsically Safe & Non-incendive	C	●	●
	IECEx Explosion proof, Intrinsically Safe & Non-incendive	D	●	●
	SAEx/CCoE Explosion proof, Intrinsically Safe & Non-incendive	E	●	●
	INMETRO Explosion proof, Intrinsically Safe & Non-incendive	F	●	●
	NEPSI Explosion proof, Intrinsically Safe & Non-incendive	G	●	●
	KOSHA Explosion proof, Intrinsically Safe & Non-incendive	H	●	●
	EAC Customs Union(Russia,Belarus,Kazakhstan) Ex Approval,Flameproof, Intrinsically Safe	I	●	●

TABLE IV	TRANSMITTER ELECTRONIC SELECTIONS					
a. Electronic Housing Material & Connection Type	Material	Connection	Lightning Protection			
	Polyester Powder Coated Aluminum	1/2 NPT	None	A _ _	●	●
	Polyester Powder Coated Aluminum	M20	None	B _ _	●	●
	Polyester Powder Coated Aluminum	1/2 NPT	Yes	C _ _	●	●
	Polyester Powder Coated Aluminum	M20	Yes	D _ _	●	●
	316 Stainless Steel (Grade CF8M)	1/2 NPT	None	E _ _	●	●
	316 Stainless Steel (Grade CF8M)	M20	None	F _ _	●	●
	316 Stainless Steel (Grade CF8M)	1/2 NPT	Yes	G _ _	●	●
	316 Stainless Steel (Grade CF8M)	M20	Yes	H	●	●
b. Output/ Protocol	Analog Output	Digital Protocol				
	4-20mA dc	HART Protocol		_ H _	●	●
	4-20mA dc	DE Protocol		_ D _	●	●
	none	Foundation Fieldbus		F	●	●
c. Customer Interface Selections	Indicator	Buttons	Languages			
	None	None	None	_ _ 0	●	●
	None	Yes (Zero/Span Only)	None	_ _ A	f	f
	Basic	None	English	_ _ B	●	●
	Basic	Yes	English	_ _ C	●	●
	Advanced	None	EN,GR,IT, FR,SP,RU, TU	_ _ D	●	●
	Advanced	Yes	EN,GR,IT, FR,SP,RU, TU	_ _ E	●	●
	Advanced	None	EN, CH, JP	_ _ H	●	●
	Advanced	Yes	EN, CH, JP	_ _ J	●	●

TABLE V	CONFIGURATION SELECTIONS					
a. Application Software	Diagnostics					
	Standard Diagnostics			1 _ _	●	●
b. Output Limit, Failsafe & Write Protect Settings	Write Protect	Fail Mode	High & Low Output Limits[3]			
	Disabled	High> 21.0mAdc	Honeywell Std (3.8 - 20.8 mAdc)	_ 1 _	f	f
	Disabled	Low< 3.6mAdc	Honeywell Std (3.8 - 20.8 mAdc)	_ 2 _	f	f
	Enabled	High> 21.0mAdc	Honeywell Std (3.8 - 20.8 mAdc)	_ 3 _	f	f
	Enabled	Low< 3.6mAdc	Honeywell Std (3.8 - 20.8 mAdc)	_ 4 _	f	f
	Enabled	N/A	N/A Fieldbus or Profibus	_ 5 _	g	g
	Disabled	N/A	N/A Fieldbus or Profibus	_ 6 _	g	g
c. General Configuration	Factory Standard			_ _ S	●	●
	Custom Configuration (Unit Data Required from customer)			_ _ C	●	●

TABLE VI	CALIBRATION & ACCURACY SELECTIONS					
Accuracy and Calibration	Accuracy	Calibrated Range	Calibration Qty			
	NA	None	None	0	21	21
	Standard	Factory Std	Single Calibration	A	23	23
	Standard	Custom (Unit Data Required)	Single Calibration	B	23	23

[3] NAMUR Output Limits 3.8 - 20.5mAdc can be configured by the customer or select custom configuration Table Vc

TABLE VII	ACCESSORY SELECTIONS			STR84G & 87G & 84A	STR82D & 83D
	Bracket Type	Material			
a. Mounting Bracket	None	None	0 _ _ _	●	●
	Angle Bracket	Carbon Steel	1 _ _ _	●	●
	Angle Bracket	304 SS	2 _ _ _	●	●
	Angle Bracket	316 SS	3 _ _ _	●	●
	Marine Approved Bracket	Carbon Steel	8 _ _ _	y	
	Marine Approved Bracket (In Line)	Carbon Steel	9 _ _ _		●
	Marine Approved Bracket	304 SS	4 _ _ _	y	
	Marine Approved Bracket (In Line)	304 SS	A _ _ _		●
	Flat Bracket	Carbon Steel	5 _ _ _	●	●
	Flat Bracket	304 SS	6 _ _ _	●	●
	Flat Bracket	316 SS	7 _ _ _	●	●
b. Customer Tag	Customer Tag Type				
	No customer tag		_ 0 _ _	●	●
	One Wired Stainless Steel Tag (Up to 4 lines 26 char/line)		_ 1 _ _	●	●
	Two Wired Stainless Steel Tag (Up to 4 lines 26 char/line)		_ 2 _ _	●	●
c. Unassembled Conduit Plugs & Adapters	Unassembled Conduit Plugs & Adapters				
	No Conduit Plugs or Adapters Required		_ _ A0	●	●
	1/2 NPT Male to 3/4 NPT Female 316 SS Certified Conduit Adapter		_ _ A2	n	n
	1/2 NPT 316 SS Certified Conduit Plug		_ _ A6	n	n
	M20 316 SS Certified Conduit Plug		_ _ A7	m	m
	Minifast® 4 pin (1/2 NPT)		_ _ A8	n	n
	Minifast® 4 pin (M20)		_ _ A9	m	m

TABLE VIII	OTHER Certifications & Options : (String in sequence comma delimited (XX, XX, XX,....)				
Certifications & Warranty	None - No additional options	00	*	*	
	NACE MR0175; MR0103; ISO15156 (FC33338) Process wetted parts only	FG	*	*	b
	NACE MR0175; MR0103; ISO15156 (FC33339) wetted and non-wetted parts	F7	c	c	
	Marine (DNV,ABS,BV,KR,LR)	MT	d	d	
	EN10204 Type 3.1 Material Traceability (FC33341)	FX	●	●	
	Certificate of Conformance (F3391)	F3	●	●	b
	Calibration Test Report & Certificate of Conformance (F3399)	F1	●	●	
	Certificate of Origin (F0195)	F5	●	●	
	FMEDA (SIL 2/3) Certification (FC33337)	FE	j	j	
	Over-Pressure Leak Test Certificate (1.5X MAWP) (F3392)	TP	●	●	
	Cert Clean for O_2 or CL_2 service per ASTM G93	OX	e	e	
	Extended Warranty Additional 1 year	01	●	●	
	Extended Warranty Additional 2 years	02	●	●	
	Extended Warranty Additional 3 years	03	●	●	b
	Extended Warranty Additional 4 years	04	●	●	
	Extended Warranty "LifeTime" Additional 15 years	15	●	●	

TABLE IX	Manufacturing Specials			
Factory	Factory Identification	0 0 0 0	●	●

MODEL RESTRICTIONS

Restriction Letter	Available Only With		Not Available With	
	Table	Selection(s)	Table	Selection(s)
b	Select only one option from this group			
d	IVa	C, D,G,H _ _	VIIa	1,2,3,5,6,7 _ _ _
c	Id	_ _ _ 0, N, B _ _ _		
e	Ib	_ 2 _ _ 2 _ _		
f			IVb	_ F _
g			IVb	_ H, D _
j	IVb	_ H _	Vb	_ 1,2,6 _
m	IVa	B, D, F, H _ _		
n	IVa	A, C, E, G _ _		
y			Ic	_ _ E _ _ _ _
2	Ie	_ _ _ _ 0 _ _ _ _ _ _ 2 _ _ _ _ _ _ 4 _ _		
3	If	_ _ _ _ _ 2 _	Ia	2 _ _ _ _ _ _
4	I	2 _ _ 0 _ _ _		
5	II	000000000	VIII	FG, F7, FX, OX,TP,MT,F1
6	I	_ _ B,D _ _ _ _	Ia	2 _ _ _ _ _ _
7			II	_ _ _ AF _ _ _ _ _ _ _ BF _ _ _ _ _ _ _ BG _ _ _ _ _ _ _ BH _ _ _ _ _ _ _ GG _ _ _ _ _ _ _ JF _ _ _ _ _ _ _ JG _ _ _ _
8			VIII	FG, F7
9	II	_ _ _ AA2_ _ _ _ _ _ AB2_ _ _		
10			II	_ _ _ _ _ _ _ _ 0
11			II	_ _ _ _ _ _ _ A _
12	If	_ _ _ _ _ A, G, 2 _		
13	II	_ _ _ _ _ _ _ 0 _	II VIII	_ _ _ _ _ _ _ _ T FG, F7
15	II	_ _ _ BF _ _ _ _ _ _ _ BG _ _ _ _ _ _ _ BH _ _ _ _ _ _ _ JF _ _ _ _ _ _ _ JG _ _ _ _		
16	I	2 _ _ _ _ _ _		
17			II	_ _ _ JA _ _ _ _
18			II	JJG _ _ _ _ _ _ JKG _ _ _ _ _ _ JLG _ _ _ _ _ _
19			If	_ _ _ _ _ 2 _
20	If	_ _ _ _ _ A,G _		
21	I	_ _ _ _ 000		
22	Ic	_ _ E _ _ _ _		
23			II	000000000

FM Approvals℠ is a service mark of FM Global
Hastelloy® is a registered trademark of Haynes International
Monel 400® is a registered trademark of Special Metals Corporation.
HART® is a registered trademark of HART Communication Foundation.
FOUNDATION™ Fieldbus is a registered trademark of Fieldbus Foundation.
Teflon® is a registered trademark of DuPont.
Neobee® is a registered trademark of Stepan Company.
Syltherm® 800 is a Trademark of Dow Corning Corporation
Klinger® C-4401 is a registered trademark of THERMOSEAL, INC
GRAFOIL® is a registered trademarks of GrafTech International Holdings Inc
Gylon® 3510 is registered trademark of Garlock Sealing Technologies
Tri-Clover Tri-Clamp® is a registered trademark of Alfa-Laval
DC® 200 and DC® 704 are registered trademarks of Dow Corning

Sales and Service

For application assistance, current specifications, pricing, or name of the nearest Authorized Distributor, contact one of the offices below.

ASIA PACIFIC

Honeywell Process Solutions,
(TAC) hfs-tac-support@honeywell.com

Australia
Honeywell Limited
Phone: +(61) 7-3846 1255
FAX: +(61) 7-3840 6481
Toll Free 1300-36-39-36
Toll Free Fax:
1300-36-04-70

China – PRC - Shanghai
Honeywell China Inc.
Phone: (86-21) 5257-4568
Fax: (86-21) 6237-2826

Singapore
Honeywell Pte Ltd.
Phone: +(65) 6580 3278
Fax: +(65) 6445-3033

South Korea
Honeywell Korea Co Ltd
Phone: +(822) 799 6114
Fax: +(822) 792 9015

EMEA

Honeywell Process Solutions,
Phone: + 80012026455 or
+44 (0)1344 656000

Email: (Sales)
FP-Sales-Apps@Honeywell.com
or
(TAC)
hfs-tac-support@honeywell.com

AMERICA'S

Honeywell Process Solutions,
Phone: (TAC) 1-800-423-9883 or
215/641-3610
(Sales) 1-800-343-0228

Email: (Sales)
FP-Sales-Apps@Honeywell.com
or
(TAC)
hfs-tac-support@honeywell.com

Specifications are subject to change without notice.

For more information
To learn more about SmartLine Pressure Transmitters, visit www.honeywellprocess.com
Or contact your Honeywell Account Manager

Process Solutions
Honeywell
1250 W Sam Houston Pkwy S
Houston, TX 77042

Honeywell Control Systems Ltd
Honeywell House, Skimped Hill Lane
Bracknell, England, RG12 1EB

Shanghai City Centre, 100 Jungi Road
Shanghai, China 20061

34-ST-03-88
November 2018

www.honeywellprocess.com